Technical Reference Manual

EtherLogic LC

Ethernet Programmable Controller

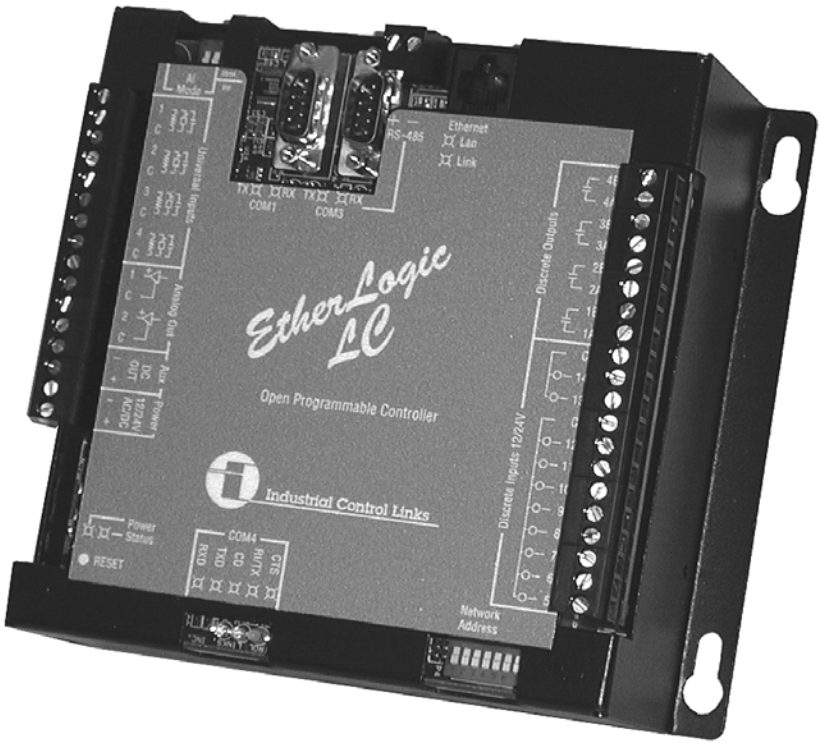

- 32-bit 386 Extended Temperature CPU
- 8MB Flash Disk
- (Program, Voice File & Data Log storage)
- High-speed Ethernet
- 2 Serial Ports plus 1 Internal port (Modem/Radio/RS-232/RS-485)
- Internal I/O:
  4 Universal (Analog/Sensor/Discrete) Inputs
  2 Analog Outputs
  10 Discrete Inputs (2 with 5KHz pulse in)
  4 Discrete (relay) Outputs
- Modular I/O Expansion to 8000 points over 4,000ft.
- IEC 61131-3 and C/C++ Programming (w/runtime licenses at no extra charge)
- 32-bit Integer, 64-bit Floating Point Math
- PID Control
- Built-in HMI/MMI
- Data Logging
- Alarm Logging and Paging
- Alarm Dialing with Voice
- Data Concentration
- Remote Program Updates
- E-mail with File Attachments
- Web Server
- -40oC to +75oC Operating Temperature Range
- 3-year factory warranty

EtherLogic LC
Technical Reference Manual

Hardware Revisions

Although, for the most part, the features and functionality of EtherLogic LC controllers described in this manual are the same for all hardware revisions since the LC controller was released, some product enhancements were made in late 2004.These enhancements include:

- Increasing the flash disk storage capacity to 8MB
- Adding LED status indicators for the COM1 and internal COM4 (modem/radio) serial ports.
- Changed the Universal Input current loop mode switches from individual switches to a 4 position DIP switch.
- Added formal support for 120/240V input levels for the Discrete Inputs

These enhancements are reflected in this manual and apply to LC controllers shipped after November 10, 2004. If you have a question regarding the hardware revision level of a specific controller or the changes that were made, please feel free to contact ICL technical support at the contacts numbers listed on the next page.

Copyright Notice

Acknowledgments

ScadaFlex, ScadaFlex Plus, EtherLogic, EtherLogic LC, PicoBrick MicroBrick, ScadaWorks and ScadaBuilder are trademarks of Industrial Control Links, Inc.

ISaGRAF is a trademark of ICS Triplex ISaGRAF, Inc.

In This Manual…

This manual provides the technical hardware information required for system design and installation of an EtherLogic Advanta controller.

If you have just purchased an Advanta controller, we hope that you are as pleased using it as we have been developing it.

If you are reading this manual looking at a future purchase, we hope that you will consider an EtherLogic when you have an application that needs a rugged controller that goes beyond simple relay logic replacement.

Support

If you have questions or need help with an application, we hope that you'll take advantage of our free technical support. Simply call us at:

(800) 888-1893

If you need to send us a fax, use either:

(530) 888-1300 **or** (530) 888-7017

If you prefer e-mail (we do), especially if you want to send us a sample of a program or other files, you can e-mail us at:

support@iclinks.com

For additional technical information including datasheets, manuals and software, visit our web site at:

www.iclinks.com

Certifications

EtherLogic Controllers are tested to the following certifications:

North America:

UL 508, CSA 142, ANSI/ISA-12.12.01-2000: April , CSA-C22.2 NO. 213-MI987 (R 1999); Class I Division 2 Groups A, B, C, and D: by INTERTEK.

European Union:

EN 60079-15: Sept 2003 ATEX Group II Category 3 Gas Vapor or Mist Explosion protection

Protection Type nA: In normal and some abnormal conditions, the equipment is not capable of igniting an explosive gas atmosphere.

All certified Etherlogic models come with the following compliance marking tag

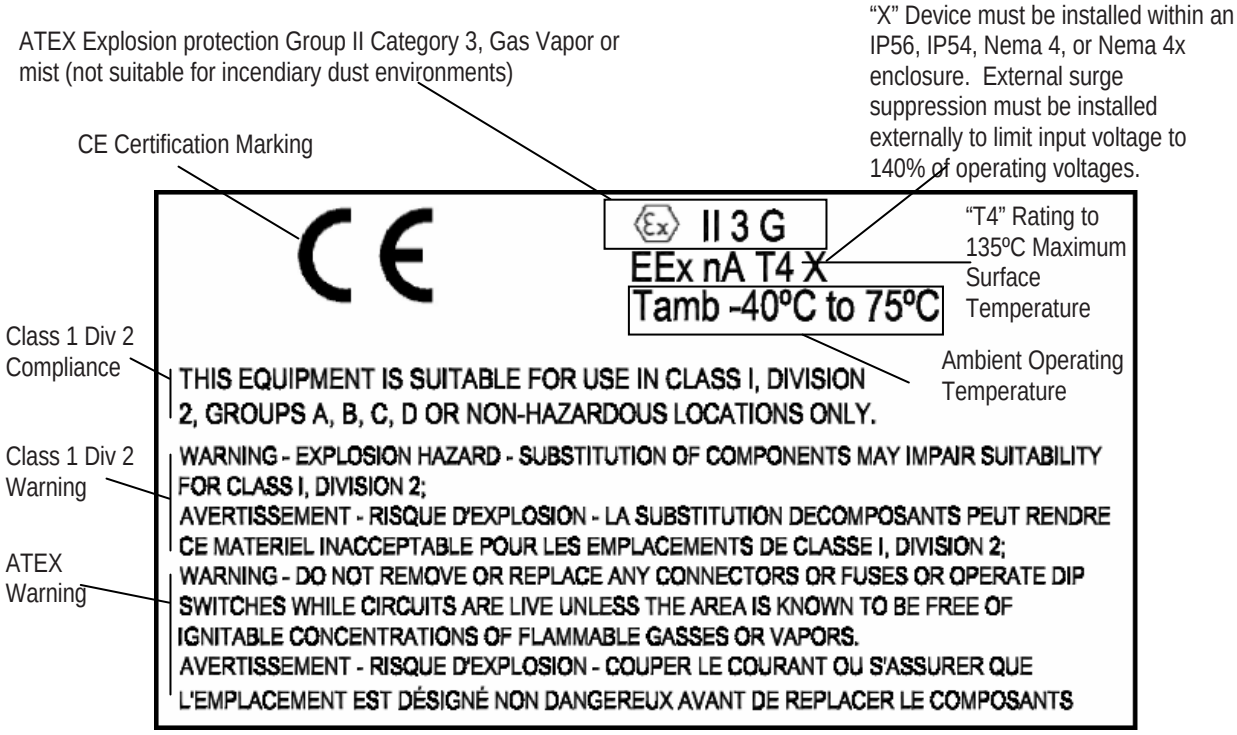

Contents

Introduction

An EtherLogic LC is a programmable controller, and much more.

An EtherLogic LC combines the programmability of a Programmable Logic Controller (PLC), the communications capabilities of an advanced Remote Terminal Unit (RTU), the alarm notification capabilities of an alarm dialer, and the data storage and retrieval capabilities of a Data Logger. By integrating the capabilities of four separate instruments, EtherLogic LCs reduce configuration and programming time, cost, and integration headaches while requiring less panel space and power than separate components.

Networking

EtherLogic LCs have a built-in Ethernet Port and support the common Ethernet and Internet protocols. These protocols are used for file transfers, e-mail, web serving and terminal access as well as standard industrial communications protocol called Modbus TCP/IP. The built-in Ethernet capability is compatible with the latest generation of Wireless Ethernet modems including 802.11 type devices and GSM, GPRS and CDMA cellular systems.

EtherLogic LCs have an RS-485 compatible serial communications port for low-cost 2-wire networking. RS-485 is used for I/O expansion as well as to interface to a variety of intelligent industrial devices including loop controllers, variable speed drives and other PLCs and RTUs.

Serial Communications

In addition to the RS-485 port, EtherLogic LCs have two RS-232 serial ports (one shared with the RS-485 port) plus an internal port for a 56K baud telephone modem, a GSM or CDMA cellular modem, or a 900MHz or 2.4GHz spread spectrum radio. When outfitted with the telephone modem, an EtherLogic LC Controller supports alarm dial-out and remote dial-in with voice alarm annunciation and touchtone/voice access to internal register setpoints, process variables and I/O control.setpoints, process variables and I/O control.

ScadaWorks IEC 61131-3 Programmable Logic

EtherLogic LC controller are configured and programmed with a Windows software package called “ScadaWorks”. ScadaWorks combines the ISaGRAF IEC 61131-3 programming software from ICS/Triplex with ICLs ScadaBuilder software for communications, networking, alarm annunciation and data logging in a single integrated package. IEC 61131-3 is the international open systems standard for industrial control programming, incorporating 6 different languages including ladder logic. Every EtherLogic LC controller ships fully configured with an ISaGRAF IEC 61131-3 runtime license.

Closely integrated with the ISaGRAF IEC 61131-3 software is ScadaBuilder, ICLs Windows based software which configures all of the non-logic operating features of the EtherLogic LC Controller. ScadaBuilder makes it easy to set-up Ethernet, Internet and serial networking and communications with multiple protocols on individual ports, configuring alarm handling and annunciation including voice, and setting up multiple simultaneous data and alarm logs.

By combining IEC 61131-3 control with communications, alarming and data logging, common resources such as tag names are shared, significantly reducing the time required to build a SCADA system.

Internal I/O & I/O Processor

EtherLogic LC has a rich compliment of built-in analog and discrete I/O. This includes:

- 4 Universal Inputs (5Vdc, 20mA, thermistor, ohms, contact closure)
- 2 20mA Analog Outputs
- 10 Discrete Inputs (including two very high-speed pulse inputs)
- 4 10A Relay Outputs

A dedicated I/O microprocessor relieves the main CPU of performing real-time I/O tasks for improved performance and signal processing.

Internal Spread Spectrum Radio Options

The EtherLogic LC Controller is available with a 900MHz or 2.4GHz Freewave Spread Spectrum radio. Three brands of 900MHz radios are available, offering a choice of price and performance.

Internal Cellular Modem Option

The cellular telephone network provides a convenient means of connecting an EtherLogic LC controller to the internet in remote locations. EtherLogic LC controller are available with both GSM/GPRS and CDMA modems for compatibility with all major cellular carriers.

Internal 56K baud Telephone Modem Option

The EtherLogic LC Controller is available with an internal high-speed telephone modem. With this option, the EtherLogic LC Controller can dial out to annunciate alarms, initiate numeric or alphanumeric pages, automatically upload data log files to a server, and send e-mails. Likewise, the controller can be dialed into to access register data and process variables, as well as download data logs and upload program updates.

EtherLogic LC Controller Architecture

The EtherLogic LC Controller has dual CPUs:

- an 8-bit Reduced Instruction Set CPU (RISC) for analog and discrete I/O
- a powerful 32-bit 386EX processor for communications and logic processing

The two processors communicate with each other using an internal communications link.

I/O Processor

The I/O processor is pre-programmed to continually scan the four universal input points, and based upon settings in configuration and calibration registers, interprets the analog values as voltage (0/1 to 5Vdc), current (0/4 to 20mA), temperature (10K thermistors), resistance (up to 65,000 ohms), or contact closures. Likewise, the ten discrete inputs are scanned and their states stored. The universal inputs and discrete inputs are totalized by the I/O processor, two of which can be software configured for very high speed counting, such as for totalizing flow from a turbine flow meter.

The I/O processor also periodically refreshes the 4 discrete outputs and 2 analog outputs from registers in the controller.

The Main CPU reads and writes the I/O processor registers over an internal communications link. The I/O information that the Main CPU reads is filtered and calibrated (using factory stored calibration values in nonvolatile memory) so that the Main CPU needs to perform little or no additional processing except for optionally scaling analog values to “engineering units”.

A watchdog timer in the I/O CPU continually monitors the communications activity between the I/O CPU and the Main CPU. If the Main CPU stops “talking” to the I/O CPU for a preset time period, all of the discrete and analog outputs are automatically turned OFF for “fail-safe” operation. This feature can be disabled if needed.

Main CPU

The Main CPU supports three serial ports; 1 external RS-232 port, 1 external RS-232/RS-485 port and an internal modem/radio port. RS-232 connections are standard for most serial communications devices, but are limited to short (<100 ft.) cable runs. RS-485 is less common, but supports networking of up to 256 parallel devices over a distance of up to 4,000 ft.

The EtherLogic LC Controller has a built-in 10BASE-T 10Mb/s twisted pair Ethernet port. The Ethernet Port provides high speed communications and is recommended for linking controllers with each other as well as with other system components such as PCs or the Internet.

EtherLogic LC controllers are like desktop PC computers in many ways:

- they use an Intel x86 computer chip.
- they store programs in nonvolatile “disk” memory (solid state Flash memory in EtherLogic LC Controllers).
- they run programs in RAM memory loaded from the “disk”.
- they have a battery-backed real time clock that allows programs to condition their operation based on the actual time and date, and support logging of data and alarm conditions with “time stamps”.
- they can run multiple programs or pieces of programs (“threads”) simultaneously so that communications, logic and I/O control operate concurrently.
- they communicate easily with other computers over networks and a variety of physical mediums including twisted pair wiring, radios and telephone lines.

EtherLogic LC Controllers differ from desktop PCs in that:

- they have no moving parts including their internal “disk,” making them immune to vibration that would harm a “normal” PC.
- they use components specially selected to operate reliably over a very wide temperature range; -40°C to +75°C (-40°F to 167°F).
- they don’t require a display, keyboard or mouse, but instead are designed for both stand-alone operation as well as remote control operation over a network.
- they have specially designed software to simplify and speed the development of industrial control applications, alarming and data logging applications.
- they come with a 3-year warranty.

EtherLogic LC Controller – Front

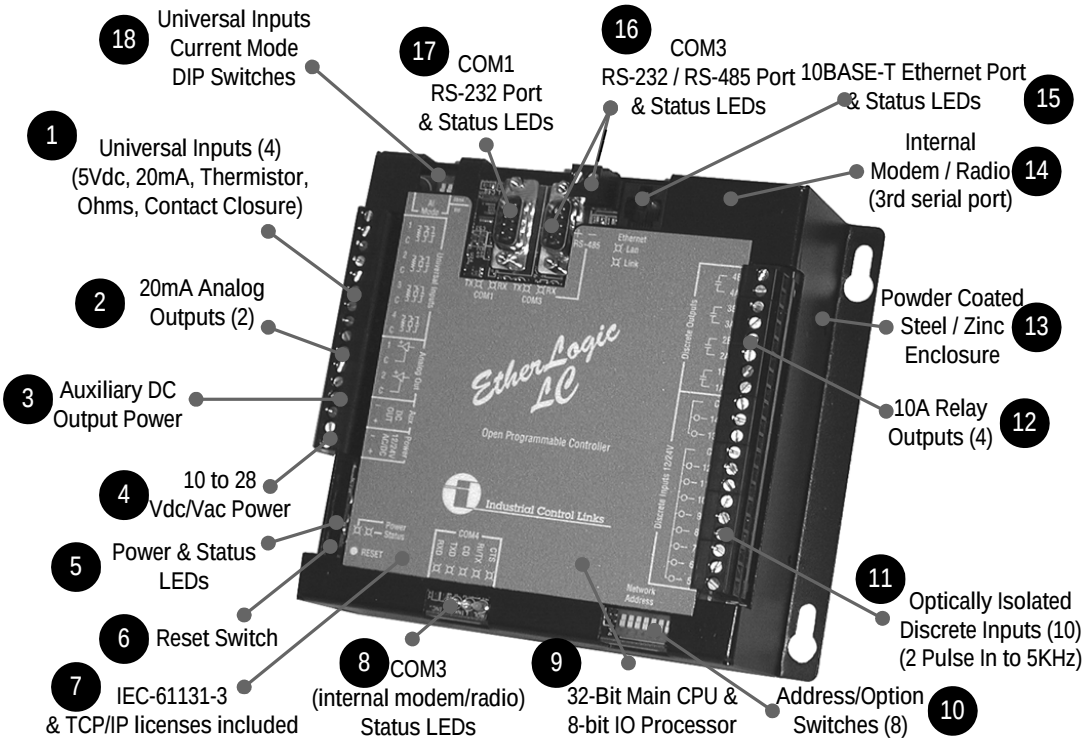

1 Universal Inputs

Four (4) combination analog and discrete inputs - accepts 5Vdc, 20mA, 10K thermistor, ohms (pots) and contact closure sensor inputs. Each input has programmable digital filtering for noise rejection

2 20mA Analog Outputs

Two (2) 20mA Analog Outputs for variable speed drives, dampers, positioners and similar devices. These outputs are frequently used for closed loop PID control.

3 Auxiliary DC Power

Auxiliary DC power for analog loops and DC powered equipment such as operator interface terminals, radios and modems, especially useful when low-cost AC power is used for the controller.

4 10 to 28 Vac/Vdc Power

The Controller accepts a very wide range of AC or DC power, from 10 to 28 Vac/Vdc at low power consumption - less than 2 Watts (typical), 6 watts maximum (with internal radio transmitting).

5 Power and Status LEDs

Power and Status LEDs - local status indication with minimal power consumption

6 Reset Switch

Same functionality as “power-on” reset

7 IEC 61131-3 and TCP/IP licenses included

Controller includes ISaGRAF IEC61131-3 (6 programming languages including ladder logic) and TCP/IP (Ethernet & Internet access) licenses - no hidden software license fees

8 COM3 (internal Modem/Radio) Status LEDs

Shows the current communications status of the internal radio or modem communications link.

9 32-bit Main CPU and 8-bit I/O processor

Excellent performance using a 32-bit Logic and Communications processor (with floating point math)and a dedicated 8-bit I/O processor to off-load high-speed counting, scaling, and signal conditioning. Main CPU has an 8MB flash “disk” (for program storage and data logging) and 1MB RAM (thousands of registers). Includes a real-time clock/calendar for time/date stamping and time and date based control.

10 Address/Options Switches

8 “DIP” switches that the software can read and use as a Node Address or to select program options.

11 10 Optically Isolated Discrete Inputs

10 discrete inputs, 8 with 40Hz counting, 2 with 40Hz / 5KHz counting (software configurable)

12 10A Relay Outputs

4 10Amp isolated relay contacts with built-in snubbers - no interposing relays required

13 Powder Coated Steel/Zinc Enclosure

Sturdy zinc impregnated steel enclosure with a tough protective black powder coat

14 Internal Modem or Radio (3rd serial port)

Cost saving internal spread spectrum radio (900MHz or 2.4GHz) or 56K telephone modem on a 3rd internal serial port. Telephone modem option includes voice alarm (dialout) and remote touchtone control (dial-in) support as well as PPP and SLIP remote serial Ethernet/Internet access.

15 10BASE-T Ethernet Port and Status LEDs

10Mb/s Ethernet Port with RJ-45 8-pin connector. Status LEDs next to the connector show connection status (LINK LED) and data transfer activity (LAN LED). Supports Modbus TCP/IP, FTP (file transfers), HTTP (HTML & web server), TELNET (low-cost user interface) and SNTP (E-mail).

16 COM3 RS-232/485 Serial Port and Status LEDs

2nd Serial Port supports full compliment of RS-232 signals for external modems as well as RS-485 for low-cost networking and I/O expansion.

17 COM1 RS-232 Serial Port and Status LEDs

Primary “console” port for diagnostics and local operator interface.

18 Universal Inputs - Current Mode DIP switches

Set these switches ON for each universal input connected to a 20mA loop sensor, OFF for all other types.

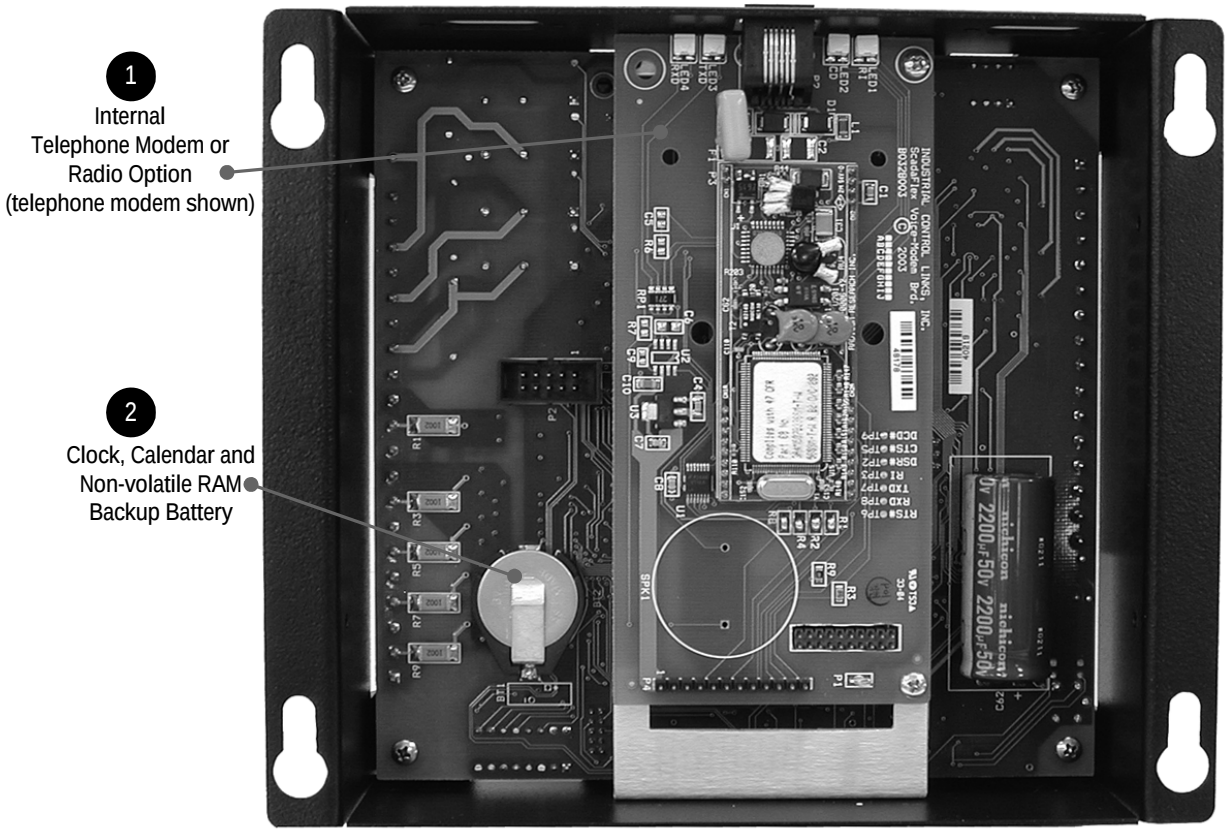

1 Internal Radio or Modem Option

The EtherLogic LC Controller can have a built-in telephone or radio installed here, saving cost and panel space, and making it easier to provide battery backup. If an internal modem or radio is not used, an RS-232/RS-485 interface board can be installed providing a third universal serial port.

2 Removable Lithium Backup Battery

Provides backup power for the internal clock, calendar and nonvolatile register memory.

Etherlogic LC Controller – Options

(optional telephone modem and spread spectrum radios)

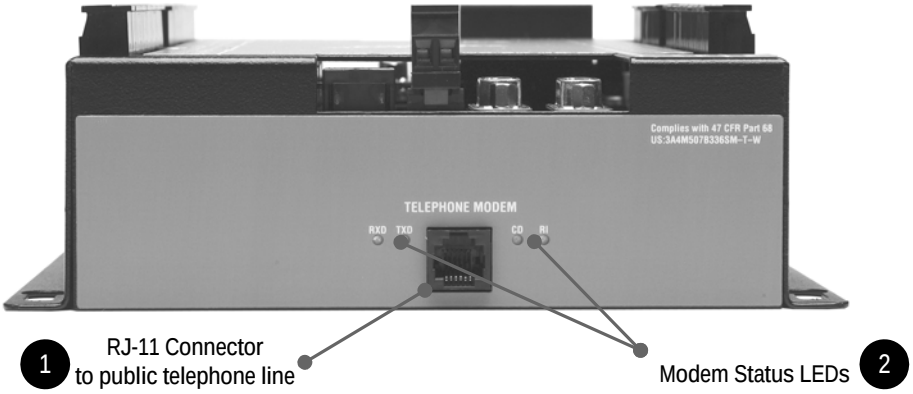

1 Telephone Modem Option: RJ-11 Connector to Public Telephone Line

Standard interface connector to a “normal” public telephone line.

2 Telephone Modem Option: Modem Status LEDs

LED indicators that show the current state of the Transmit & Receiver Data, Carrier Detect, and Ring Indicator signals.

Etherlogic LC Controller with optional Freewave Spread Spectrum Radio installed

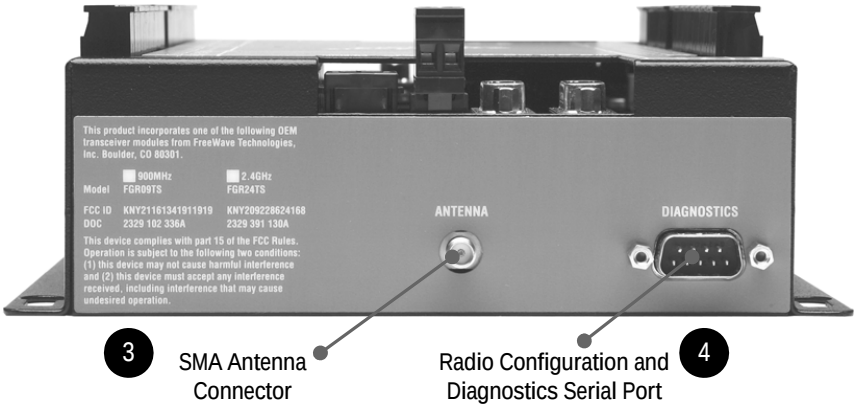

3 Freewave Spread Spectrum Radio Option: SMA Antenna Connector

Standard SMA antenna connector for 900MHz (all) and 2.4GHz (military and non-US, Reverse SMA for 2.4 GHz in the USA.

4 Freewave Spread Spectrum Radio Option: Configuration and Diagnostics Connector

Second RS-232 port for configuration of Freewave Spread Spectrum radio as well as on-line diagnostics.

Status LED Indicators

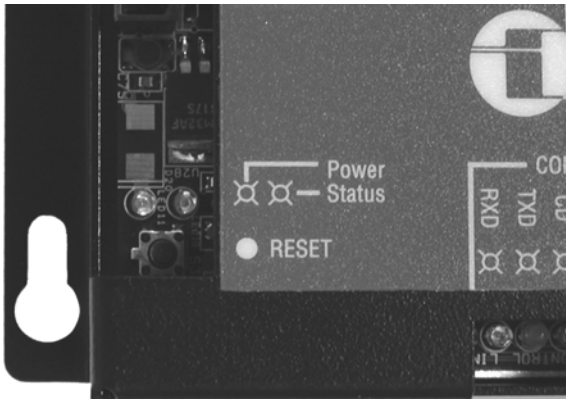

EtherLogic LC Controllers have two green LED status indicators and a reset switch located near the lower left hand corner of the controller.

POWER LED

When illuminated, the Power LED indicates that power is applied to the controller. The lit state of the indicator should not be construed to indicate that the controller power is within the specified operating range, but only that AC/DC power is present.

CPU STATUS LED

The Status LED indicator is controlled by the Main Logic/Communications processor. Under normal operation the flash intermittently during controller start-up, the at a periodic rate while an ISaGRAF program is executing ("heartbeat indicator"). The LED state can also be controller by a user program for application specific status indication while a program is running.

Reset Pushbutton

Pressing the "Reset" pushbutton is equivalent to powering the controller OFF and then ON. This will cause the controller to re-initialize and restart its operating program.

Network Address/Option Switches

EtherLogic LC Controllers have a bank of 8 "DIP" switches at the bottom right-hand side of the controller. The switches can be used to set a network address in the field without requiring a laptop computer. Depending on how they are configured, the switches can represent a 1 in 256 address directly, such as for a Modbus Slave, or they can represent the lower "octet" of a TCP/IP Ethernet address. If the switches are not used for addressing, they may be used to select runtime options in a users program.

Additional information on using these switches is contained in the ScadaWorks/ScadaBuilder manual and Help files.

Installation

Mechanical Installation

EtherLogic controllers are designed to be installed in a protective enclosure with the appropriate NEMA rating for the environment that the controller will be used. Typical NEMA ratings are as follows:

North America:

Indoor applications only: NEMA 1 Indoor or Outdoor applications: NEMA 4, 4X or 12 rated enclosures.

European Union:

Must be installed inside IP54 or IP56 rated enclosures.

Transient suppression must be supplied externally for each active signal for the following circuits:

Signal(s)	*Maximum Operating Voltage*	*140% Transient Suppression Level.*	*Circuit Connection*
Digital Inputs 5 through 12 120 VAC RMS/DC	300V	420VAC RMS or 420VDC	DI to DI Common
Digital Inputs 5 through 12 12/24V AC DC	50V	70VAC RMS or 70VDC	DI to DI Common
Pulse Inputs	108 Vpp	152Vpp	PI to PI Common
RS 232 Signals (DTR, CD, RTS, CTS, RX, and TX) *	+/-12VDC	+/- 16.8VDC	Signal to RS 232 Common

** Different RS-232 ports support different signal configurations. Some signals may not be available on some ports and therefore do not need transient protection. Refer to the RS-232 pin out table later in this document for details.*

The enclosure material must be a minimum of 1.14mm (0.045”) thick. Typically, the controller is mounted vertically in such an enclosure on a steel backplate. If an alternative mounting scheme is used, it is recommended that the controller be mounted on a noncombustible surface.

External surge suppression must be installed to limit all operating voltages to within 140% of signal voltage. This includes all RS-232 signals, Digital Input, and Pulse Input terminals.

CAUTION: If the controller is mounted on or above a combustible surface (such as a wood backboard), a plate of at least 1.43mm (0.056”) galvanized or 1.6mm (0.063”) uncoated steel extending at least 150mm (5.9”) beyond the controller on all sides must be installed.

The controller is designed to be secured to a mounting surface with four #10 screws in a 6.75” x 6.5” rectangular pattern. A scale mounting template is included on the inside of the back cover of this manual.

Electrical Installation

All field wiring connections to and from the EtherLogic controller, except for RS-232 and Ethernet communications are made via removable terminal blocks.

Class 1 Division 2 Group A, B, C, and D Requirements

THIS EQUIPMENT IS SUITABLE FOR USE IN CLASS I, DIVISION 2, GROUPS A, B, C, D OR NON-HAZARDOUS LOCATIONS ONLY.

WARNING - EXPLOSION HAZARD – SUBSTITUTION OF COMPONENTS MAY IMPAIR SUITABILITY FOR CLASS I, DIVISION 2;

AVERTISSEMENT - RISQUE D’EXPLOSION – LA SUBSTITUTION DECOMPOSANTS PEUT RENDRE CE MATERIEL INACCEPTABLE POUR LES EMPLACEMENTS DE CLASSE I, DIVISION 2;

WARNING - EXPLOSION HAZARD - DO NOT DISCONNECT EQUIPMENT UNLESS POWER HAS BEEN SWITCHED OFF OR THE AREA IS KNOWN TO BE NON-HAZARDOUS;

AVERTISSEMENT - RISQUE D’EXPLOSION - AVANT DE DÉCONNECTER L’EQUIPEMENT, COUPER LE COURANT OU S’ASSURER QUE L’EMPLACEMENT EST DÉSIGNÉ NON DANGEREUX.

WARNING - EXPLOSION HAZARD – BATTERIES MUST ONLY BE CHANGED IN AN AREA KNOWN TO BE NON-HAZARDOUS.

AVERTISSEMENT- RISQUE D’EXPLOSION –AFIN D’ÉVITER TOUT RISQUE D’EXPLOSION, S’ASSURER QUE L’EMPLACEMENT EST DÉSIGNÉ NON DANGEREUX AVANT DE CHANGER LA BATTERIE.

WARNING - DO NOT REMOVE OR REPLACE ANY CONNECTORS OR FUSES OR OPERATE DIP SWITCHES WHILE CIRCUITS ARE LIVE UNLESS THE AREA IS KNOWN TO BE FREE OF IGNITABLE CONCENTRATIONS OF FLAMMABLE GASSES OR VAPORS.

AVERTISSEMENT - RISQUE D'EXPLOSION - COUPER LE COURANT OU S'ASSURER QUE L'EMPLACEMENT EST DÉSIGNÉ NON DANGEREUX AVANT DE REPLACER LE COMPOSANTS

Battery type: Lithium Coin Battery, Renata CR2032

NOTE: The terminal block screws must be tightened to 7 lb-in.

Diagrams in the following sections provide examples for analog and discrete I/O and power wiring. The following wiring guidelines must be followed:

Stranded conductors from #14 to #26 AWG, or solid conductors from #12 to #26AWG consisting of either copper or copper-clad aluminum is permitted.

Wires must be rated for 240V, 90ºC and suitably current rated.

Wire insulation must be a minimum of 0.9mm (0.031”) thick if subjected to movement, flexing or handling during use or maintenance.

Wires shall be routed away from sharp edges, screw threads, burrs, fins, moving parts, drawers, and the like.

Clamps and guides, if used, shall be provided with smooth, well-rounded edges.

Wiring that is subject to flexing during servicing such as that from a stationary part to a part mounted on a hinged door shall be provided with additional insulation at any point where flexed.

Additional insulation, if used, shall be insulating tubing, or a wrapping of not less than two layers of insulating tape. All must be minimum of 90ºC and 240V.

All splices and connections must be mechanically secure and provide electrical continuity

Conductors are also not to be grouped.

CAUTION: Use supply wires suitable for 15ºC above surrounding ambient

ATTENTION: Utiliser des fils d’alimentation qui conviennent a une temperature de 15ºC au-dessus de la temperature ambiente.

Grounding

The steel enclosure of the EtherLogic Advanta controller must have a bonding conductor (14AWG or heavier copper wire) that connects the controller case to the enclosure with less than 0.1 ohms of resistance. A green #10 grounding screw is provided on the end of the controller for attaching the bonding conductor.

If a DIN-rail mounting plate (option) is used, that plate must also have a bonding conductor attaching it to the equipment enclosure. A green #10 screw is provided on the mounting plate for this purpose.

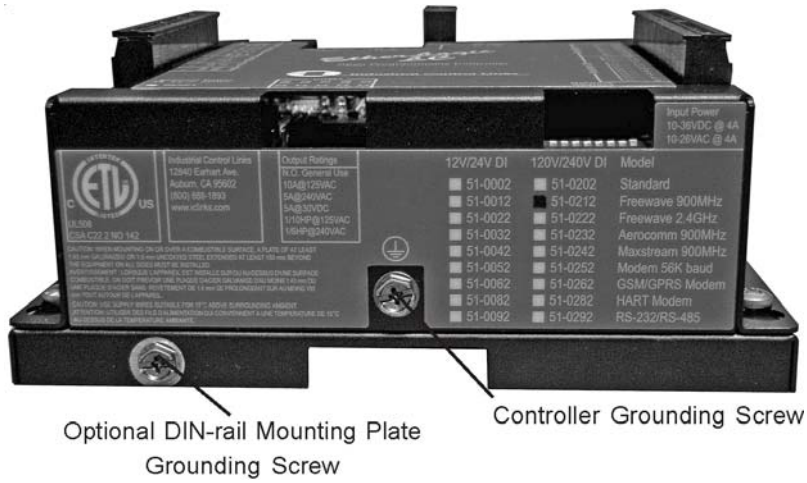

EtherLogic LC Analog & Discrete I/O

The EtherLogic LC Controller includes a full compliment of analog and discrete I/O:

- 4 Universal (Analog/Sensor/Discrete) Inputs
- 2 Analog Outputs
- 10 Discrete Inputs (2 include very high-speed counting support)
- 4 Discrete (relay) Outputs

Universal Inputs support "normal" 4 to 20mA and 0 to 5V process signal levels, as well as resistance measurement and direct readout of temperature from 10K ohm thermistors. The Universal Inputs can also accept contact closure and logic-level discrete input signals.

Analog Outputs provide 20mA current loop control signals, or with a single resistor, 0 to 5 or 0 to 10V voltage control signals.

Discrete Inputs are optically isolated input points for sensing switch and contact closures from on/off sensors. EtherLogic LC controllers are ordered as "12/24V" or "120/240V" models depending on the signal levels of the Discrete Inputs. Two of the discrete inputs are isolated from the rest and have programmable filtering, which when minimized, allows these inputs to count pulses at rates beyond 5KHz.

Discrete Outputs provide contact closure signals to operate on/off type control devices. The discrete outputs of EtherLogic LC controllers are heavy duty relays with contacts rated to switch up to 10 amps (125Vac).

I/O Expansion: Additional I/O capacity is supported with a family of expansion modules that connect to the controller via a high-speed 2-wire serial interface. This provides the additional benefit of a distributed I/O system. Wiring cost is reduced by enabling the I/O modules to be placed up to 5,000 feet away from the controller and close to the sensors and control devices, thereby minimizing the distances for field wiring runs.

Universal Inputs

The Universal Inputs accept both analog and discrete inputs signals from sensors that monitor levels, flows, temperatures, pressure, etc. as well as discrete input devices such as switches and relays contacts. Analog measurements are made with a rugged 10-bit Analog-to-Digital (A/D) converter.

The EtherLogic LC Controller has 4 universal inputs.

Signal Types and Levels

The universal inputs may be individually configured to accept standard 5V or 20mA process control signals, resistive sensors such as thermistors and potentiometers, and contact closures. With a pair of external resistors, the inputs can be configured for higher voltages such as 0 to 10V or 0 to 30V dc.

The input mode, sensor type and scaling are software configurable using ICLs ScadaBuilder software in an I/O configuration screen. An example EtherLogic I/O configuration is pictured below.

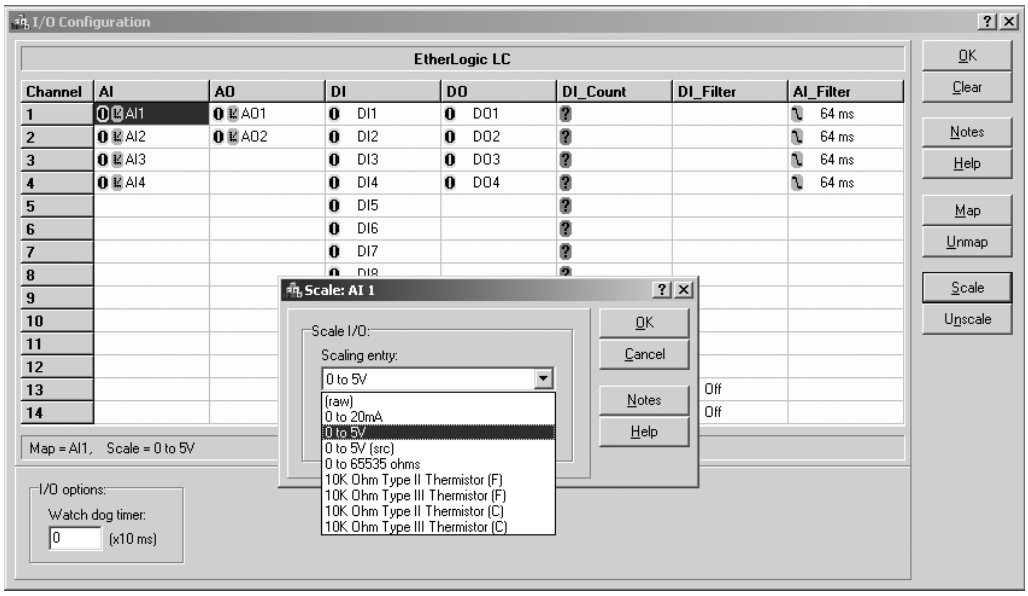

Each channel has a mode setting that may be set to “Raw”, current (mA), voltage (5V), resistance (ohms), or a choice of two type of thermistors reading out in degrees F or C. Note in the far right column, the amount of filtering can also be individually configured for each input. On start-up, the main CPU downloads the configuration information to the I/O processor to set the mode and filtering parameters that the I/O processor will use for processing the analog input data from each channel.

RAW Mode

Raw mode bypasses all scaling and calibration in the I/O processor, providing “raw” 10-bit readings from the A/D converter. A full scale reading of 1023 represents an input of approximately 5Vdc. If the current configuration switches are enabled, the input current can be calculated as the voltage drop read across a precision 121 ohm resistor, or just over 20mA for a full scale readings of 1023. The calculation is:

A/D Reading = (1023 * mA * 243) / 5000

If the current sources are enabled (for resistance measurements), the RAW readings are the ratiometric values read across the input resistance in series (bottom portion of a voltage divider) with a precision 10,000 ohm 0.1% low-drift resistor connected to the A/D reference. The calculation is:

A/D Reading = 1023 * R / (R + 10,000)

where R is the resistance being measured.

5Vdc Mode

When configured for voltage measurements, the EtherLogic LC Controller measures signals from 0 to 5 volts. The I/O processor scales and performs calibration correction on the readings, so that a full scale reading of 5Vdc is presented to the main CPU as a value of 5000 (1,000 counts per volt). This provides readings that without further scaling, read out directly in 1mV increments (imagine a decimal point 3 places from the right to interpret the readings in volts). The Scaling section of ScadaBuilder can be used to change this scaling to more meaningful engineering units.

20mA Mode

When configured for milliampere measurements, the EtherLogic LC Controller measures signals from 0 to just over 40mA (200% over-range for “standard” 20mA signals). The I/O processor scales and performs calibration correction on the readings, so that a full scale reading of 40mA is presented to the main CPU as a value of 40000 (1,000 counts per milliampere). The milliampere mode is typically used to measure the output of 4 to 20mA sensors. The readings from these sensors will come into the Main CPU as 4000 for 4mA and 20,000 for 20mA.

Current is measured by reading the voltage drop across a precision 243 ohm resistor through which the current is flowing. Besides setting the input mode in the ScadaBuilder software, current loops require that the current sense resistors be enabled by setting DIP switches (labeled AI Mode 20mA/Std) in the upper left-hand corner of the controller near the Universal Input terminal blocks connections. There is a separate switch for each input.

Resistance Modes

EtherLogic LC controllers can measure resistance from 0 to 65,535 ohms. The readings can be scaled to engineering units, such as degrees of rotation for a potentiometer or temperature for a resistance type temperature sensor that is not automatically handled by the I/O processor. The ScadaWorks software provides functions for linearization of nonlinear sensors.

Resistance is measured by sourcing current through a precision 10,000 ohm reference resistor that is in series with the sensor. The current through the sensor is limited to less than 0.5mA to minimize the effects of self-heating. The I/O processor measures the voltage drop at the junction of the reference resistor and the sensor and compares it to the reference voltage. The I/O processor is then able to ratiometrically calculate the sensor resistance.

If the I/O processor is configured for thermistor temperature sensors, the calculated resistance is automatically converted to a linearized temperature reading in degrees F or degrees C. The I/O processor is programmed to directly support two types of

industry standard 10,000 ohm thermistors. Other types of thermistors can be supported by taking the resistance reading in ohms and having the Main CPU calculate the corresponding temperature using an ISaGRAF “CHARCTRZ” block for linearization and conversion.

Contact Closures

In addition to resistance measurement, the internal current sources are also used to support contact closure input signals so that no external power source is required.

To use a Universal Input to sense a contact closure, the input MUST be configured for resistance measurement.

Thermistors

Thermistors are temperature sensors that are popular for use in HVAC, building monitoring and automotive applications. The resistance of a thermistor varies non-linearly with temperature, so the I/O processor automatically corrects for the non-linearity and provides a calibrated reading in degrees C or F to the controller.

The EtherLogic LC Controller supports two common types of thermistors; 10K ohm, Type II and III (resistance is 10,000 ohms at 25°C/77°F). The only difference between them is the “shape” of their temperature to resistance curves. The supported temperature ranges and corresponding readings from the I/O processor are:

Sensor Mode	Temperature	From I/O Processor
Type II - Deg C	-40.1oC to 203.4oC	-401 to 2034
Type II - Deg F	-40.1oF to 398.1oF	-400 to 3981
Type III - Deg C	-40.1oC to 201.1oC	-401 to 2011
Type III - Deg F	-40.1oF to 393.9oF	-400 to 3939

The table below shows the temperature to resistance relationship for the 10,000 ohm thermistors directly supported by the EtherLogic LC controller.

Deg C	Deg F	10K Type II - ohms	10K Type III - ohms
-40	-40	335,671	239,831
-35	-31	242,195	179,280
-30	-22	176,683	135,233
-25	-13	130,243	102,890
-20	-4	96,974	78,930
-15	5	72,895	61,030
-10	14	55,298	47,549
-5	23	42,314	37,316
0	32	32,650	29,490
5	41	25,395	23,462
10	50	19,903	18,787
15	59	15,714	15,136
20	68	12,493	12,268
25	77	10,000	10,000
30	86	8,056	8,197
35	95	6,530	6,754
40	104	5,324	5,594
45	113	4,366	4,656
50	122	3,601	3,893
55	131	2,985	3,271
60	140	2,487	2,760
65	149	2,082	2,339
70	158	1,751	1,990
75	167	1,480	1,700
80	176	1,256	1,458
85	185	1,070	1,255
90	194	916	1,084
150	302	185	238

Input Protection

The Universal Inputs are overload, surge, and reverse polarity protected by a combination of self-resetting polymer fuses and “Transorb” transient limiters. Input levels greater than 6Vdc or 24mA, or negative signal levels will cause the transient protection circuitry to start limiting the input signal. Greater overloads will cause the polymer fuses to begin to increase in resistance protecting the internal analog circuitry. During a full overload condition, the inputs will conduct some current, but that current is held at a safe level. When the fault is cleared, the input is restored back to normal operation automatically.

Calibration

The calibration of the universal inputs is software controlled. Calibration tables for the inputs are stored in nonvolatile EEROM and calibration is performed by software techniques without making mechanical adjustments.

Field Wiring

The universal input connections come into the Controller on 8 positions of a 16 position removable terminal block. There are 4 sensor input connections and 4 common connections, one per input channel. The common connections are electrically tied together within the Controller.

For 20mA or 5 volt sensors, the universal inputs are passive, requiring an active signal source. 20mA current loop devices must either have their own internal loop power supplies, or an external supply must be used (such as the Auxiliary DC Output built into the EtherLogic LC). Voltage type sensors are typically self-powered anyway. It is best if self-powered devices are isolated to avoid ground loops.

Current for resistance type sensors is automatically sourced from the controller when the controller program is configured for resistance or thermistor measurements on an input. In these cases, no external source is required; the sensor is simply connected across the input connections.

Typical wiring to the universal inputs is shown below:

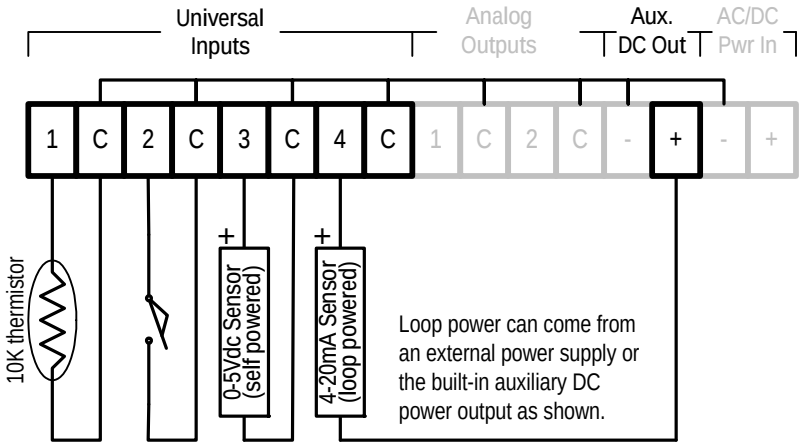

NOTE: The terminal block screws must be tightened to 7 lb-in.
Please refer to the preceding installation section for additional electrical wiring requirements.

Discrete Inputs

Discrete inputs are used to monitor the state of switches, relays contacts, motor starter auxiliary contacts and any other on/off type sensor signal. In the EtherLogic LC, the discrete inputs are optically isolated to avoid ground loop effects and prevent damage from transients and power surges on the input lines.

The EtherLogic LC controller has 10 discrete inputs. These inputs are labeled DI5 though DI14 (the first 4 “discrete inputs” are actually part of the Universal Inputs that accept only contact closures and low-voltage input signals).

Signal Types and Levels

The discrete inputs have a unique input design that accepts both AC and DC signals. The inputs are not sensitive to signal polarity, supporting DC sensors with either "sinking" or "sourcing" output configurations as well as switch contacts with AC or DC signals.

The discrete input circuitry of the EtherLogic LC controller is purposely designed to respond to DC signals (that do not cross through 0 volts) faster than AC signals. This provides better noise rejection in systems with 50Hz or 60Hz control power, but allows for a little faster response times in machine control applications that typically use DC photoeyes and proximity switches.

The standard EtherLogic LC discrete inputs are designed to operate in 12 and 24 volt control systems or 120 and 240 volt control systems depending on the model number ordered. The guaranteed ON and OFF thresholds and maximum input ratings are:

Model Type	OFF Threshold	ON Threshold	Maximum Input
12 / 24V	6 Vdc/Vac	9 Vdc/Vac	50 Vdc/Vac
120V	50 Vdc/Vac	75 Vdc/Vac	250 Vdc/Vac

The EtherLogic LC discrete inputs have hysteresis in order to improve their noise rejection. The hysteresis ensures that the voltage at which an input turns ON is higher that the voltage at which the input will turn OFF. Once the input signal reaches the ON threshold, it must drop down below the OFF threshold for the input to turn OFF. This feature combined with normal component tolerances defines the difference between the "guaranteed" OFF and "Guaranteed" ON thresholds in the table above.

Pulse Totalization

The I/O processor in the EtherLogic LC performs pulse totalization on all Discrete Inputs (including the Universal Inputs), providing reliable fast pulse counting that is not sensitive to program scan time.

To use one of the I/O processors pulse totalizers, simply map the tag name of an integer variable to the appropriate channels counter as shown below.

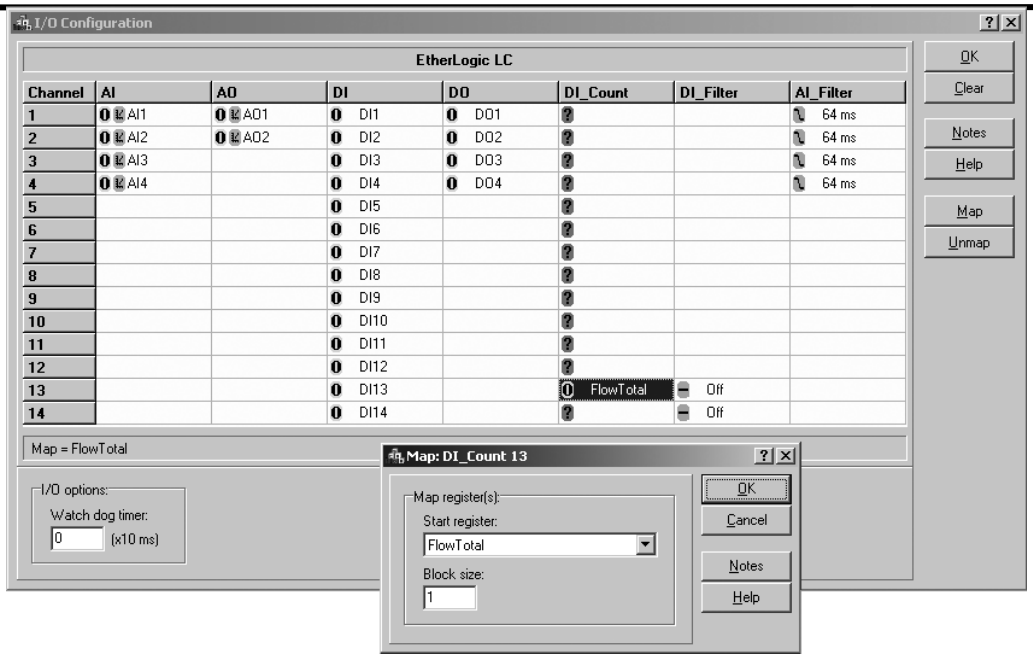

Note that DI13 and DI14 have controls in the column labeled “DI_Filter”. When these filter bits are set to “OFF” as shown, these discrete inputs can count high-speed pulses in excess of 5KHz. With the filtering turned ON, the input counting rate is limited to 40Hz (DC pulse) or 10Hz (switched AC). On all of the other “standard” discrete inputs (DI5 through DI12), the filtering is fixed ON, so these inputs are limited to 40Hz (DC) and 10Hz (AC) counting rates. The Universal Inputs (DI1 through DI4) may also be used for pulse counting at rates of up to 500Hz.

The pulse totalizers are 32-bit counters, meaning that the totalizers count up to 4,294,836,225 ON transitions before they “roll over” to zero again. The counters can be reset to zero at any time under program control by writing a 0 to the register. Like any other registers, totalizer registers can be declared as “retentive” (nonvolatile) so that the accumulated values will be remembered through a power failure. The built-in counting features can be used for very accurate flow and wattage totalization, including monitoring flow rates using high-speed turbine flow meters.

Field Wiring

Discrete input signals come into the Controller on 12 positions of a 20-position removable terminal block. There are 10 sensor input connections arranged in groups of 8 and 2 inputs with separate commons for each group.

The discrete inputs are passive and require an active voltage to be switched between input signal connections and their common connections to complete the input circuits. The inputs are isolated, so that the power source for the inputs can safely be the Controller power supply or the controllers Auxiliary DC output, without causing a ground loop. The inputs are not sensitive to polarity, so the power lead connected to the field sensors can be either the negative or the positive side of the power source. The input current at 12Vdc is approximately 1mA, sufficient for contact “wetting”, but low enough for practical use in solar and battery-backed applications.

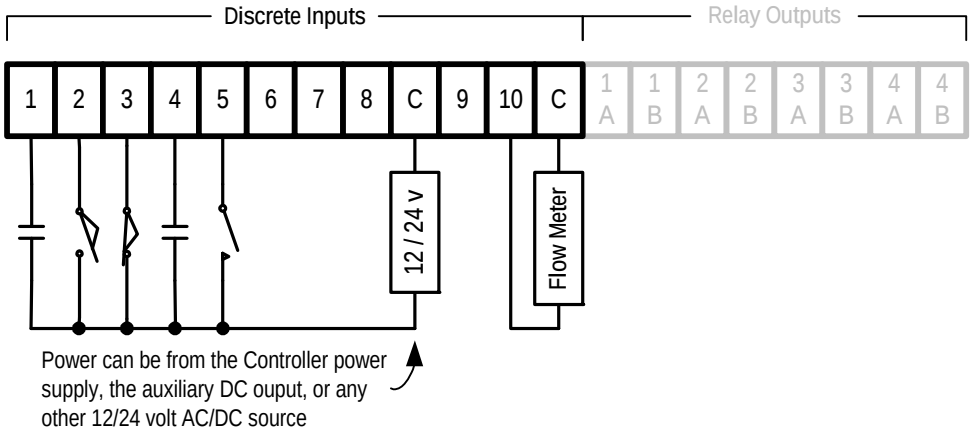

Discrete Inputs – Field Wiring Example (wiring for 12/24V model shown)

Remember that the two "C" common connections are isolated from each other. If all of the Discrete Inputs are to share a common, the two "C" terminals must be jumpered together.

NOTE: The terminal block screws must be tightened to 7 lb-in.
Please refer to the preceding installation section for additional electrical wiring requirements.

Discrete Outputs

Discrete outputs are used to control motor starters, lights, annunciators and any other type of on/off control device. The discrete outputs are individually isolated 10 amp "dry" relay contacts (refer to load ratings below). The contacts have built-in snubbers to reduce arcing and radiated electrical interference. The outputs can switch both low-voltage and 120V/240V loads.

EtherLogic LC controllers have 4 discrete relay outputs.

Field Wiring

The discrete outputs are passive "dry" contacts and require an active supply voltage on one side of the load, while the relay output from the controller switches the other side of the load to the opposite supply leg. The outputs are isolated so that they can be inserted in the "middle" of external control circuits and can switch external signals without causing ground loops. The relays may be used to switch AC or DC signals and power. The maximum rating of the load that may be switched and the relay contact life depends on the type of load and the applied voltages as follows:

General Use (Resistive Loads)	*10Amps @ 125Vac, 5 Amps @ 250Vac or 30Vdc - 100,000 cycles*
Inductive Loads	*10Amps @ 277Vac - 10,000 cycles (COS=0.4)*
	1/10HP @125Vac, 1/6HP @250Vac -100,000 cycles

The Discrete Outputs from the Controller connect to their field wiring via 8 terminals of a 20-position removable terminal block as shown below:

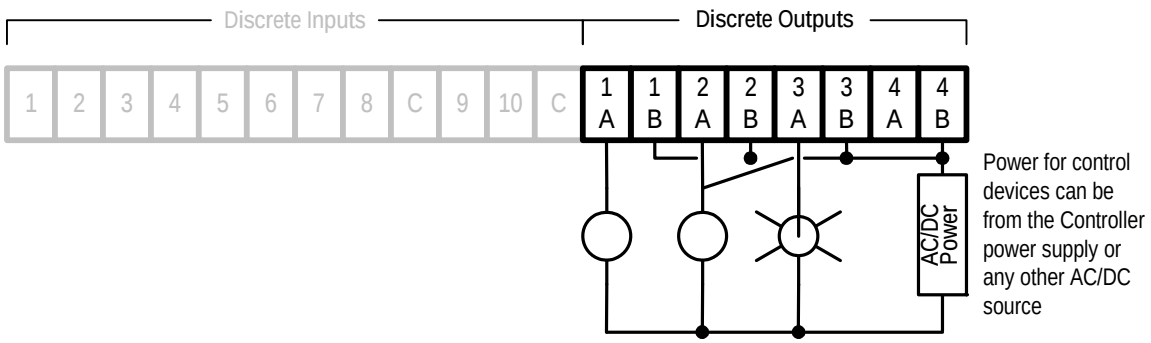

NOTE: The terminal block screws must be tightened to 7 lb-in.
Please refer to the preceding installation section for additional electrical wiring requirements.

No fusing or overload protection for the discrete outputs is provided within the controller. External protection should be included in the output circuits to protect both the controller relay contacts and the loads that they drive. Typically, large loads are fused individually, while smaller loads share a fused leg.

The relay output contacts of EtherLogic LC controllers have built-in snubber protection. These snubbers, wired across the relay contacts, reduce arcing that degrades the contacts and can cause premature relay failure when controlling inductive loads such as relays and motor starters.

Even with snubber protection, some people choose to incorporate the added protection of transient suppression diodes across DC coils, and MOVs or other clamping devices across AC coils.

When using diodes (DC circuits), be sure to observe the polarity of your connections. A reversed diode will actually cause a short circuit! Metal Oxide Varistors (MOVs) may be used for AC and DC circuits, and are not polarity sensitive.

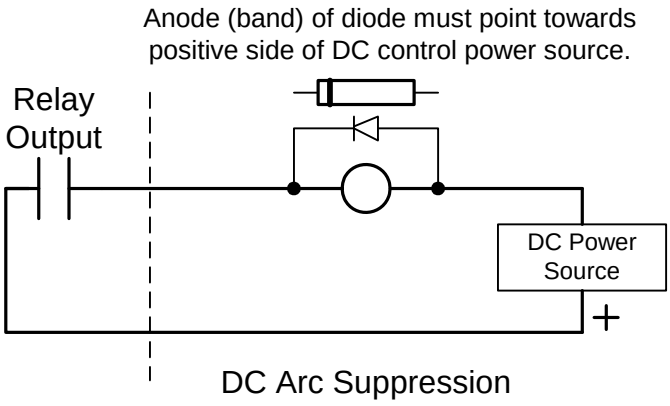

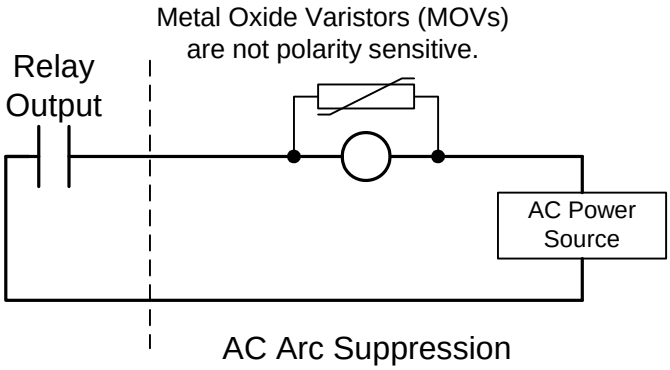

Analog Outputs

Analog outputs are used to control variable speed drives, valves, positioners and dampers as well as chart recorders and digital displays. The EtherLogic LC Controller has two 10-bit analog outputs.

Signal Types and Levels

The two analog outputs produce 0 to 20mA control signals. With the addition of a single external resistor (per channel), the outputs can be converted to voltage outputs (i.e 0 to 5Vdc or 0 to 10Vdc).

The resistor value can be calculated as: Rsense = Vout / 0.02

The resistor values required for common voltage ranges are:

Range	Sense Resistor
0 to 1Vdc	50 ohms (1/8 watt or more)
0 to 5Vdc	250 ohms (1/8 watt or more)
0 to 10Vdc	500 ohms (1/4W or more)

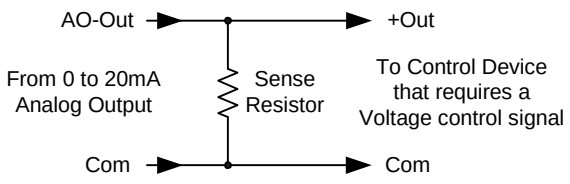

Common 1% values of 49, 249 and 499 ohms may be substituted for the “ideal” values listed above.

The EtherLogic LC analog outputs source current from the Controller power supply. The common of the analog outputs are connected to the controllers power supply common. Control devices connected to these two outputs should be isolated to avoid unforeseen ground loops.

Output Scaling

The EtherLogic LC Analog Outputs are scaled to provide a 0 to 20mA output signal with output values of 0 to 2,000 (1 count = 1uA). The outputs have an additional 5% or so of headroom, so it’s possible to use values greater than 2,000 to get output levels slightly higher than 20mA. Note that since the outputs have an actual resolution of 10-bits (a range of 0 to 2,000 would actually need about 11 bits), it will require an increase or decrease of a couple of counts in the analog output value to cause a change in the actual current output. The 0 to 2,000 scaling is simply done for the convenience of system setup. If desired, the analog outputs can be rescaled by changing or adding a scaling record in the I/O section of Scadabuilder.

The common 4 mA offset required by 4 to 20mA control devices and indicators can also be set up in the scaling portion of the ScadaBuilder software.

In the sample ScadaBuilder scaling record on the right, a value of 0 to 1000 will be translated to a 4 to 20mA signal (corresponding values of 400 to 2000 sent to the I/O processor).

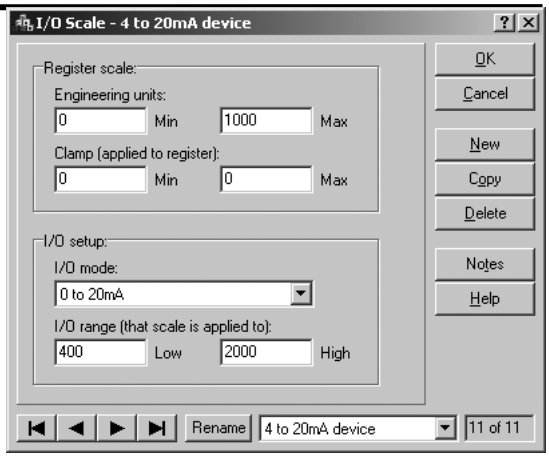

Calibration

The Analog Output calibration is software controlled. Calibration tables for the analog outputs are stored in nonvolatile EEROM and calibration is performed by software techniques without mechanical adjustments (pots).

Field Wiring

The Analog Outputs from the Controller connect to their field wiring via four (4) terminals (2 signals, 2 commons) of a 16-position removable terminal block. Typical wiring to the Analog Outputs is shown below:

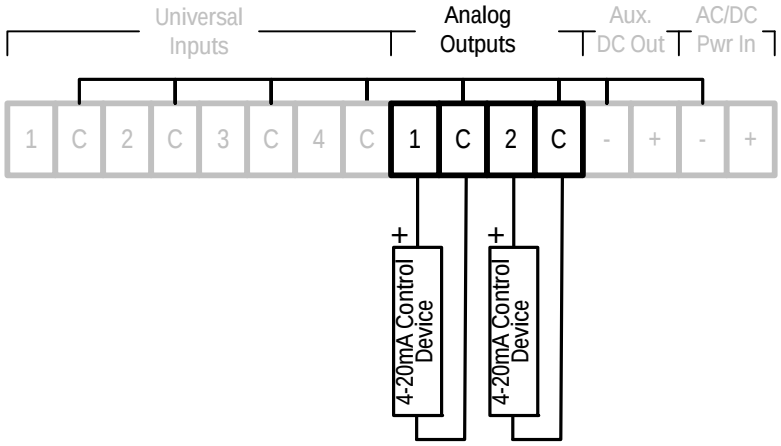

Analog Outputs - Field Wiring Example

NOTE: The terminal block screws must be tightened to 7 lb-in.
Please refer to the preceding installation section for additional electrical wiring requirements.

Ethernet

EtherLogic LC Controllers come with an Ethernet port, providing higher speeds and more connectivity features than serial ports. The Ethernet Port can be used as a high-speed point-to-point connection to a single PC, connected in a wired or wireless network of Controllers and PCs, or connected to the Internet via a DSL, cellular or cable modem.

> **!** ***Ethernet connectors look very similar to standard telephone connectors. Be sure that a "normal" telephone line is NEVER plugged into the Ethernet connector. Although it most likely will not damage the EtherLogic Advanta controller, it will probably disrupt normal telephone operation.***

Ethernet has several different standards for the type of media or wiring that is used to interconnect devices. EtherLogic LC Controllers support the more common 10BASE-T unshielded twisted-pair standard.

10BASE-T differs from other Ethernet topologies. Instead of tapping off one long cable, each Ethernet device has a point-to-point connection with either a hub or a switch. In some systems, a switch will provide improved performance over a hub, but in most systems using EtherLogic LC controllers, there will be very little difference. One exception: a single PC can be connected to a single Controller using a "crossover" cable without using a hub. Use pre-made (and tested) "CAT5" patch cables to connect EtherLogic LC Controllers to hubs or switches.

One big advantage of using 10BASE-T is that each Ethernet device is isolated from the other devices on the network. When common wiring errors occur (such as shorts) , the problem will only affect a single device on the network without bringing down the entire network.

The 10BASE-T specification limits the wiring distance between EtherLogic LC Controllers and a hub or switch to 328ft. (100meters). Hubs and switches act as buffers, extending the reach of networks. There is a limit of up to 4 hubs that may be used in one chain.

Typically, an Ethernet network consists of a main high-speed "backbone" with taps to switches or hubs that then feed down to devices like EtherLogic LC Controllers. Because of the 100 meter/link and 4 hub limits, EtherLogic LC Controllers can be up to 1,300 ft. away from the "backbone" without resorting to other buffering techniques.

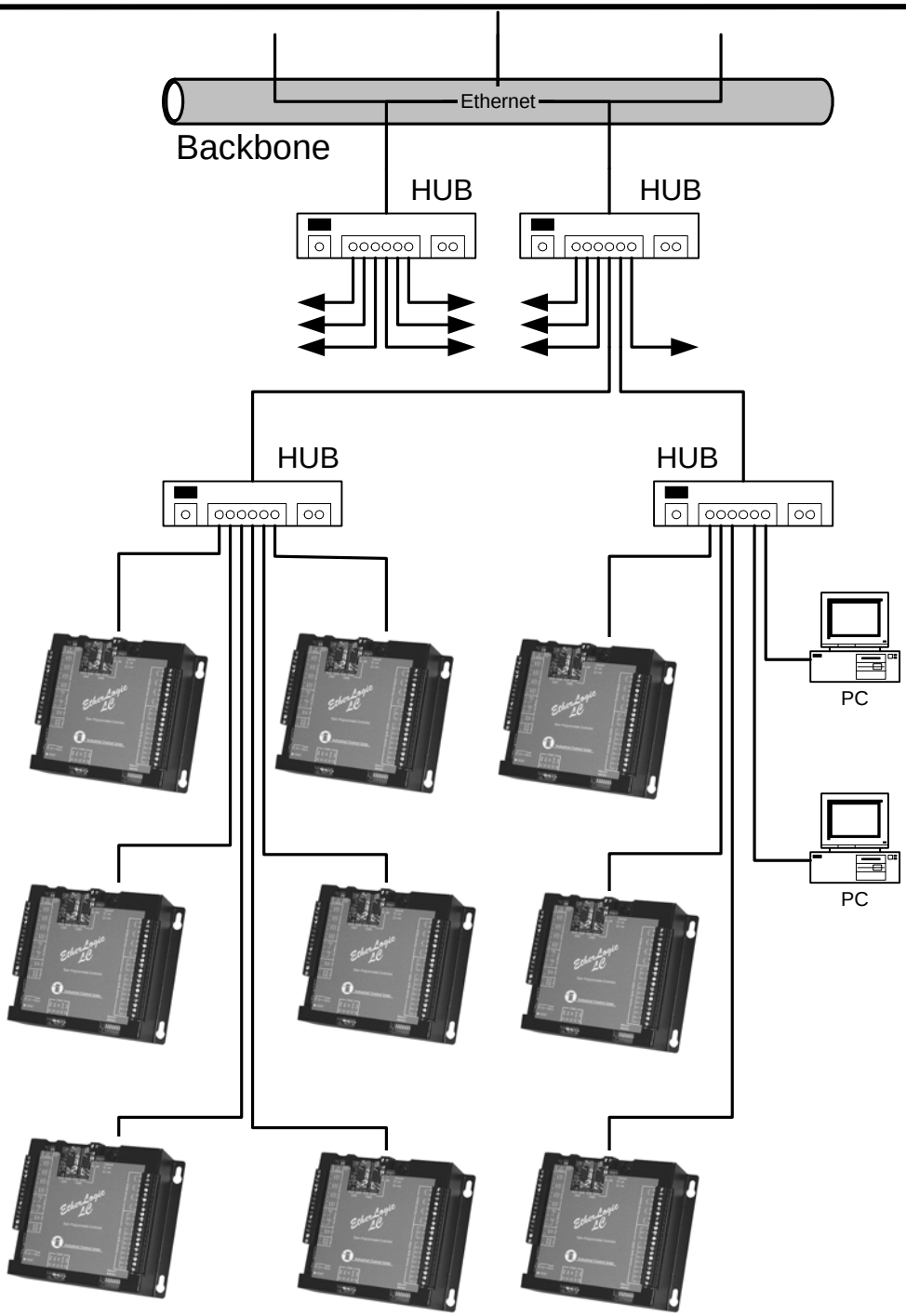

Serial Communications

The most common serial communications standard in SCADA and industrial control systems are RS-232 for short point-to-point connections, and RS-485 for longer point-to-point and networked communications. The EtherLogic LC Controller has 1 RS-232 serial port and one combination RS-232/RS-485 serial port.

RS-232 Serial Communications Interfaces

Both external serial communications ports are RS-232 compatible. Both ports are designed for high-speed communications to 115K baud, although the second port has additional buffering and should be used for extremely high-speed communications if needed. The first port (COM1), typically used as a console and diagnostic port, is the simplest and has no modem control lines associated with it. The second port has nearly all modem control lines, ideal for external radio and telephone modems. Both serial ports use 9-pin male "D" connectors in exactly the same configuration and pinout as an IBM/PC compatible computer so you can you low-cost easy-to-find cables.

The RS-232 connector pin assignments and supported signals on each RS-232 port are detailed below:

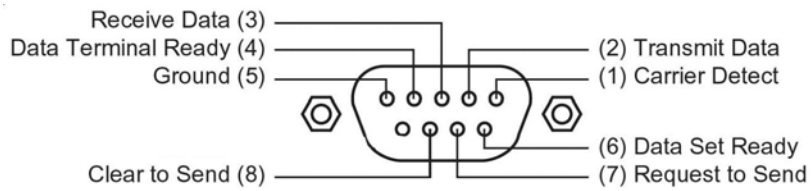

Signal	Name	Pin	COM1	COM3
Carrier Detect	DCD	1	-	◆
Receive Data	RXD	2	◆	◆
Transmit Data	TXD	3	◆	◆
Data Terminal Ready	DTR	4	-	◆
Ground	GND	5	◆	◆
Data Set Ready	DSR	6	-	◆
Request to Send	RTS	7	-	◆
Clear to Send	CTS	8	-	◆
Ring Indicator	RI	9	-	-

Power

EtherLogic LC Controllers operate from either AC or DC power, from 10 to 28Vac or 10 to 36Vdc. The power consumption of the Controllers is very low; less than 2 watts typical, with peaks of up to 6 watts, depending on installed options. Because of their low power consumption and wide input power range, they are ideal for solar or battery backed applications.

A 12Vac or 24Vac control power transformer or the ScadaFlex DC Power Supply are recommended for non battery backed applications, while the ScadaFlex UPS is recommended for battery-backed systems. The wide operating temperature rating of the ScadaFlex power supplies compliments the EtherLogic LC Controller, while the simple control transformer solution provides the lowest cost alternative for less demanding applications. The ScadaFlex UPS is especially worth considering as economical insurance against unreliable “brownout” prone AC power sources.

If an AC power source is used, an auxiliary DC power output is available to power analog loops and/or a ScadaFlex Viewpoint operator interface. The output voltage depends on the input power, although it is limited so as to not exceed 30Vdc. The output is short-circuit protected and rated to supply up to 0.25A.

Power Wiring

The power wiring uses 4 terminals of a 16-position removable terminal block shared with the analog inputs and outputs as shown below:

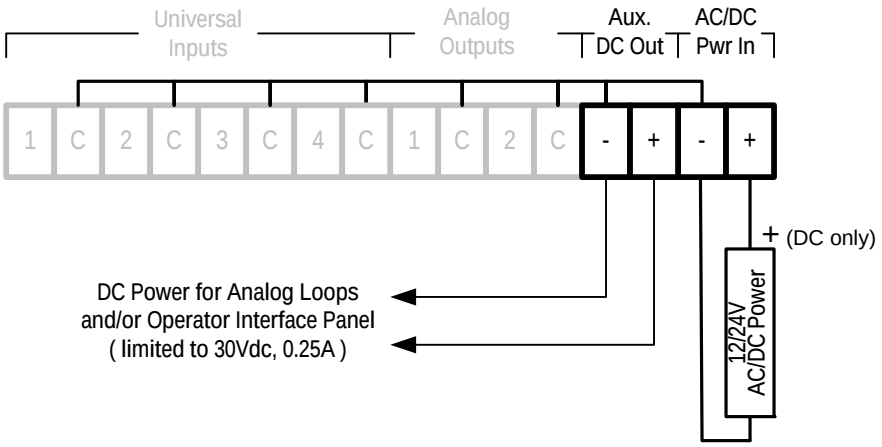

NOTE: The terminal block screws must be tightened to 7 lb-in.
Please refer to the preceding installation section for additional electrical wiring requirements.

Maintenance

EtherLogic LC Controllers are designed for long-term maintenance-free operation. The only maintenance items typically required by the Controller are occasional replacement of a clock battery, setting the time and date, analog calibration and possible software and firmware updates.

Clock/Calendar/NV RAM Battery

The internal Real Time Clock, Calendar and nonvolatile register memory have a small lithium “coin” style battery that keeps these circuits running when there is no power to the controller. The battery is retained in a holder that is accessible from the bottom of the controller.

Depending on the ambient temperature and how often and long the controller is left powered off, the battery will need to be replaced every two to five years. A boolean bit may be assigned to an internal battery monitor circuit that monitors the battery condition. If this feature is taken advantage of, a controller program can annunciate an alarm to provide an early warning that the battery will need replacement.

The replacement battery is a Renata/Rayovac CR2032. When you replace the battery, be sure to pay attention to the batteries polarity. A large “+” sign should be readily visible on the top of the battery.

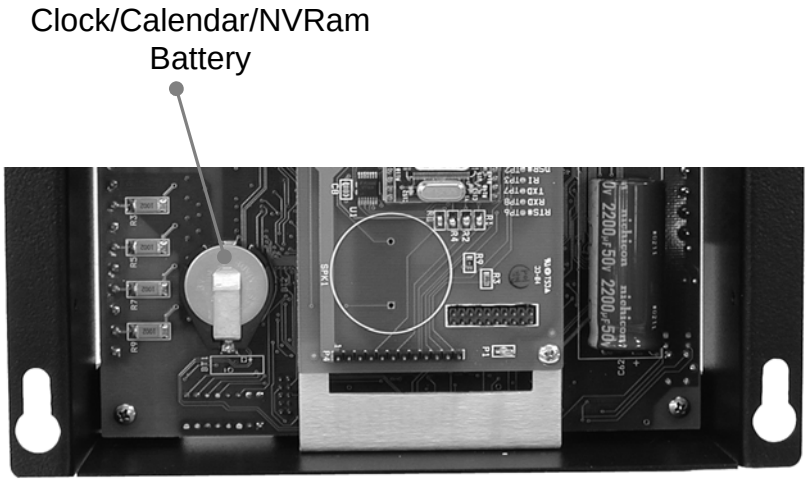

Time & Date

Using a PC running a terminal emulation program such as HyperTerminal (supplied with Windows) or ScadaBuilder, the Time and Date can be viewed and set from the “C>” prompt when the PC is connected to COM1 of the Controller. To get to a “C>” prompt, cycle the Controllers power or press the “Reset” button, then press the Escape key on your computers keyboard several times while the Controller is just starting to

"boot". Type "TIME" followed by a carriage Return to View the current time setting. Do the same with the DATE. To change the Time or Date, enter a new value when prompted.

There are also functions and function blocks built into ScadaBuilder for setting the time from within a program, or automatically updating the time from a Global Positioning System (GPS) receiver.

Calibration

The calibration of analog inputs and outputs should be checked typically once a year. The calibration values for the EtherLogic LC Controller are retained in nonvolatile EEROM memory, and may be viewed and changed using a ScadaBuilder application available from Industrial Control Links. Please contact technical support for a copy, along with the recommended field calibration procedure. A backup copy of all calibration values, as determined by an automated test system in the factory, is always retained separately in another area of nonvolatile memory, "just in case". The same ScadaBuilder application can restore the factory calibration values if needed.

Software and Firmware Updates

Controller software is easily and quickly updated using ICLs ScadaBuilder software with its built-in Kernel and Configuration update functions. In addition, the I/O processors firmware can be "drag and dropped" into the terminal window which automatically transfers it to the flash "disk" on the Controller. The new firmware can them be installed using a Bootloader program shipped with the Controller or available from the ICL web site (Note: the "drag and drop" mechanism can be used with any files to be sent to the Controller). Please refer to the ScadaBuilder documentation for more information.

Internal Telephone Modem Option

EtherLogic LC Controllers can be ordered with an internal 56K baud dial-up telephone modem. With the internal telephone modem option, the Controller can dial out to annunciate an alarm with synthesized voice (including "real-time" process variables), send a message to a numeric or alphanumeric pager, send a text message to a cell phone, or send an e-mail (with file attachments such as data logs).

The EtherLogic LC Controller can also be configured to accept incoming calls for remote PC or touchtone voice-prompted access to process variables, and to make password protected register and I/O changes, as well as for remote program debugging and updates.

The internal telephone modem is functionally similar to the high-speed modems used in PC computers, except that the LC internal modem has the following additional features:

- supports voice synthesis for alarm dialing

- supports touchtone tone recognition for remote dial-in and control
- carries the full wide-temperature rating (-40°C to +75°C) of the EtherLogic LC Controller.
- Requires no additional panel space
- is an additional com port, freeing up an external RS-232/RS-485 port
- runs off of internal DC power from the Controller, making it easy to provide long-lasting uninterruptable battery backed operation.

The modem telephone connector and status lights are built into the upper side of the Controller. The connector accepts a standard 6-pin modular telephone plug, of which only the center two pins are used for the telephone line connection (standard telephone wiring configuration).

Internal Spread Spectrum Radio Option (Freewave)

EtherLogic LC controllers are available with internal Spread Spectrum Radios, requiring no license and supporting data rates of up to 115K baud.

The spread spectrum radios used in LC controllers may be ordered for operation in either one of two bands designated by the Federal Communications Commission (FCC); 900 MHz (902 to 928MHz) and 2.4GHz ((2.400 to 2.4835MHz). Unlike conventional radio systems that transmit and receive on fixed frequencies, spread spectrum radios “hop” periodically from one frequency to another in a pseudo random pattern. The hopping pattern is user settable, and all radios that are configured to talk to each other follow this pattern, changing frequencies up to 100 times per second. The radios can utilize a total of 112 different frequencies.

Spread spectrum radios tend to be less affected by outside interference and are more secure than conventional radios because they are constantly changing operating frequency. If a spread spectrum radio encounters interference at a particular frequency, it simply picks up where it left off after hopping to the next frequency a few milliseconds later. The radios offer very high data reliability, utilizing a unique 32-bit error detection and correction scheme to ensure that corrupted data is never passed to the Controller. This protection is above and beyond the protocol level error handling.

The embedded radio can deliver up to one watt of RF power, the maximum allowed by law in these frequency bands. This is typically a lower power level than other types of radios operating at fixed licensed frequencies, but these spread spectrum radios can have a range of up to 60 miles in an open area. The radios have a built-in repeater function, so that each radio can serve as a repeater to relay the messages of other radios located farther out as well as communicating the data from the Controller. There is no limit, other than transmission time, to the number of repeater hops used, so spread spectrum radio networks can provide hundreds of miles of coverage.

The internal radios support real-time on-line diagnostics that enable a single LC Controller to serve as a central point to examine the status of any other radio and radio link in the network while communicating. The radios can be remotely configured and can even have the microprocessor firmware updated from this Master station. The remote diagnostics capability provides immediate status information for any segment of the radio network, including repeater links. This data can include average signal strength and noise levels, as well as specific signal and noise levels for each of the 112 hopping frequencies. Additional information such as antenna reflections (SWR), operating temperature, and data error rates are available to analyze the performance of each portion of the radio network.

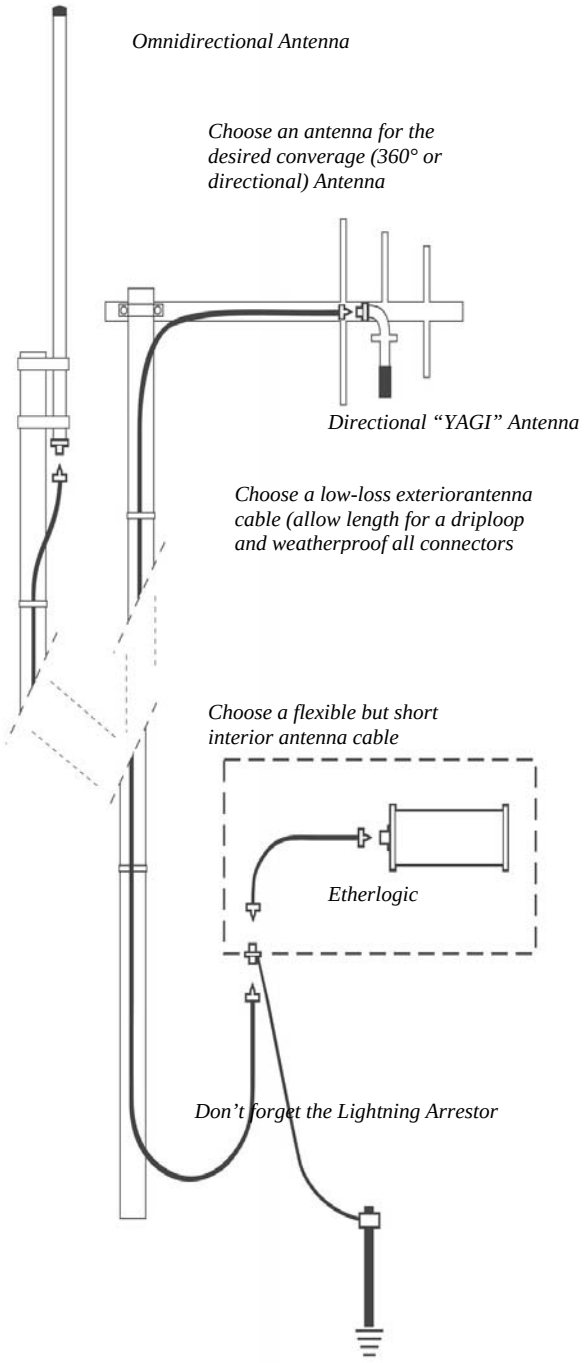

Radio Installation

The internal spread spectrum radio is manufactured by Freewave Technologies (www.freewave.com) and is functionally similar to their stand-alone FGR series radios without requiring any additional panel space, cabling or integration effort. Freewave DGR and FGR series radios may be used together with the EtherLogic LC radio options.

The EtherLogic LC radio option uses a female "SMA" type antenna connector. The antenna connector and the radio status lights are located on upper side of the Controller (see below) as well as on the front of the controller.

Typically, a short, lightweight cable (such as RG-223 or LMR-200) connects between the radio antenna connector and a lightning arrestor in the panel. A lightning arrestor with dedicated ground rod is required for any outdoor installation. The lightning arrestor can also serve as a bulkhead connector to pass through the cabinet wall and transition to heavier, lower-loss type exterior antenna cables such as LMR-400 and LMR-600. These cables then connect to Yagi (directional) or Omni (omnidirectional) antennas. LMR-600 cable has lower loss for longer runs. LMR-400 is cheaper and more flexible, but less than 100ft. of cable can cut the signal strength in half! Heliax has the lowest loss, but is stiff and hard to work with.

Once the radio system has been verified, all exterior connections should be taped and weatherproofed for long-term reliability.

Radio Configuration

The internal spread spectrum radio is automatically connected to an extra serial port (COM4) within the Controller. The port can be configured like any other serial port including parameters such as baud rate, parity, etc. Like any other serial link, the radios operating parameters must be set to match those of the attached serial port in the EtherLogic LC Controller. While the radio serial port parameters are set using ICLs ScadaBuilder software on a PC, the radio is configured using a PC computer connected to the radio diagnostic serial port close to the antenna connector. Use a "straight through" serial cable. Communicating with the radio requires a terminal emulation program. This can be either the terminal emulator built into ScadaBuilder software, or the HyperTerminal software that comes with Windows, or similar alternative software. Set the terminal emulation configuration to:

19,200 baud, no parity, 8 data bits and NO flow control

The configuration menus in the radio are accessed by typing "Shift U" (be sure that "Caps Lock" is OFF, then while holding down the Shift key, press the U key). You should see the menu pictured below and the three internal radio status lights at the bottom of the controller should be GREEN. Pressing the Escape key several times will return the radio to normal operation.

Radio Configuration - MAIN MENU

When the radio has been placed into configuration mode, the radio status lights will glow green and the Main Menu screen will be displayed:

```
                    MAIN MENU
              Version 2.23 11-21-2002
                 Standard Hop Table
            Modem Serial Number 911-8743

(0)    Set Operation Mode
(1)    Set Baud Rate
(2)    Edit Call Book
(3)    Edit Radio Transmission Characteristics
(4)    Show Radio Statistics
(5)    Edit MultiPoint Parameters
(6)    TDMA Menu
```

From this menu, a series of sub-menus are accessed to examine or set operating parameters. The radios are highly configurable, but for most applications, only menus 0 (Set Operation Mode), 1 (Set Baud Rate), 3 (Edit Radio Transmission Characteristics), 4 (Radio Statistics) and 5 (Edit MultiPoint Parameters) are applicable and discussed in the remainder of this section. A full operations manual for the radios is available.

Radio Configuration - SET OPERATION MODE

The “Set Operation Mode” screen is selected by pressing “0” at the Main Menu. In this screen, the radios basic operating mode is chosen. The screen is depicted below:

```
                    SET MODEM MODE
                  Modem Mode is    2

(0) Point to Point Master
(1) Point to Point Slave
(2) Point to MultiPoint Master
(3) Point to MultiPoint Slave
(4) Point to Point Slave/Repeater
(5) Point to Point Repeater
(6) Point to Point Slave/Master Switchable
(7) Point to MultiPoint Repeater
(F) Ethernet Options
(Esc)     Exit to Main Menu

Enter Choice
```

The current operating mode for the radio is always shown at the top of this screen just under the title header.

Of the 9 available operating modes, only three of the modes are typically used with the Advanta controllers. These three modes are the “Point to Multipoint” operating modes:

Point to Multipoint Master

In this mode, there must be one, and only one Master radio in a system. All of the other radios in the network will operate as slaves to the Master. Designate one radio as the Master using selection #2 in the menu.

Point to Multipoint Slave

After a single radio has been designated as the Master, the remaining radios in the network must be set as “Slaves” using selection #3 in the menu.

Point to Multipoint Slave/Repeater

To reach outlying areas in the network, the Slave radios can act as repeaters. Slave radios that will also act as repeaters are configured using selection #7 (Point to MultiPoint Repeater) in the menu. Be sure to also enable Slave/Repeater operation in Menu #5.

Return to the Main Menu

Once a radios mode has been set, press the ESC (escape key to get back to the Main Menu (only press once, or else you will end up back at the “C>” prompt).

Radio Configuration - SET BAUD RATE

The “Set Baud Rate” screen is selected by pressing “1” at the Main Menu. In this screen, the radios basic serial communication parameters are chosen. The screen is depicted below:

```
                              SET BAUD RATE
                         Modem Baud is  115200

(0)    230,400
(1)    115,200
(2)    76,800
(3)    57,600
(4)    38,400
(5)    19,200
(6)    9,600
(7)    4,800
(8)    2,400
(9)    1,200
(A)    Data, Parity     0
(B)    Modbus RTU       1
(C)    RS232/485        0
(D)    Setup Port       3
(E)    Turn Off Delay   0        Turn On Delay      0
(F)    Flow Control     0
(Esc)  Exit to Main Menu
Enter Choice
```

The current communications speed (baud rate) setting for the radio is always shown at the top of this screen, just under the title header. The baud rate can be set to any one of ten standard speeds by simply typing a 0 through 9 corresponding to baud rates of 1,200 baud to 230,400. Any of these speeds may be used with the EtherLogic Advanta controller. The speed selected MUST match the port speed selected using the ScadaBuilder configuration software for the controller.

Parity

The radio supports the standard “Odd, Even or None” parity selections. For most applications including those using Modbus, 0 or “None” should be used.

Modbus RTU

This parameter should normally be set to “1” (enabled), forcing the radio to keep the integrity of a single message as one packet instead of using multiple packets which does not meet Modbus standard timing requirements.

RS-232/485, Turn Off Delay, Turn On Delay and Flow Control

These are not used in the Advanta controller and must be set to “0”.

Setup Port

Set this parameter to 3. This enables both radio ports for configuration.

Radio Configuration - EDIT RADIO PARAMETERS

The “Edit Radio Transmission Characteristics” screen is selected by pressing “3” at the Main Menu. The screen, with typical settings for an Advanta based SCADA system, is depicted below:

```
                        RADIO  PARAMETERS

WARNING:  Do  not  change  parameters  without  reading  manual

(0)      FreqKey             5
(1)      Max  Packet  Size   8
(2)      Min  Packet  Size   9
(3)      Xmit  Rate          1
(4)      RF  Data  Rate      3
(5)      RF  Xmit  Power     10
(6)      Slave  Security     0
(7)      RTS  to  CTS        0
(8)      Retry  Time  Out    255
(9)      Low  power  Mode    0
(A)      High  Noise         0
(B)      MCU  Speed          0
(C)      Remote  LED         1
(Esc)    Exit  to  Main  Menu

Enter  Choice
```

The parameters in this menu are geared towards handling special circumstances and should normally be left as shipped from the factory. One item though; “Remote LEDs”, must be turned on in order to enable the status LEDs located between the COM1 connector and the address switches. Be sure this parameter is set to a 1.

Most of the other parameters in this screen are used to optimize the radios operation in the event of problems in the field. They improve the operation of the radio in close proximity with other radio networks, in high (radio) noise environments, or to optimize the operation of the radio for certain mixes of data or types of protocols. In general, the radios are plug-and-play and these parameters are best left at the factory settings unless a technical support person recommends changing them.

Typically, your radio setup should match the screen pictured above.

Radio Configuration - SHOW RADIO STATISTICS

The “Show Radio Statistics” screen is selected by pressing “4” at the Main Menu. The screen is depicted below:

```
                              MODEM STATISTICS

Master-Slave Distance (m) 0083200

Number of Disconnects            0
Radio Temperature                0
Antenna Reflected Power          0
Transmit Current (mA)         0000
                             Local   Remote1   Remote2   Remote3
Average Noise Level             12
Average Signal Level             0
Overall Rcv Rate   (%)           0
C086EF

Press <ret> for Freq Table, <Esc> to return to main menu
```

The radio statistics screen shows an accumulated history of information regarding the performance of the radio and the quality of the radio link. Unlike the “real-time” updated information available at the Master, this information is a snapshot that can only be viewed while not operating, but it does provide a local tool to analyze the performance of a radio link.

Master-Slave Distance (m)

This value in meters is valid for distances over 1 Km (0.6 miles)

Radio Temperature

Should be 75 (°C) or less.

Average Noise and Signal Levels

These values are an average across all frequencies. Detailed information by frequency is available by displaying the Frequency Table accessed from this screen (see lower prompt line). Ideally, the noise level should be below “30” and the signal level should be at least “15” more than the noise. Note that this is NOT in dB, but arbitrary units to provide a relative signal strength and noise measurement.

Overall Rcv Rate (%)

This value provides an indication of the quality of the radio link and the impact on data throughput. A good quality link will have an Overall Receive Rate of 75% or better. The radio will not pass erroneous data, but a lower Overall Receive Rate indicates that data throughput might be affected at higher data rates, such as 115,200 baud.

Radio Configuration - EDIT MULTIPOINT PARAMETERS

The “Editing MultiPoint Parameters” screen is selected by pressing “5” at the Main Menu. The screen, with typical settings for the EtherLogic Advanta, is depicted below:

```
                        MULTIPOINT PARAMETERS

(0)     Number Repeaters          1
(1)     Master Packet Repeat      3
(2)     Max Slave Retry           9
(3)     Retry Odds                9
(4)     DTR Connect               0
(5)     Repeater Frequency        0
(6)     Network ID               30
(7)     Reserved
(8)     MAdvantaster Sync         0
(9)     1 PPS Enable/Delay      255
(A)     Slave/Repeater            0
(B)     Diagnostics               0
(C)     SubNet ID           Disabled
(D)     Radio ID             Not Set
(Esc)  Exit to Main Menu

Enter Choice
```

Number of Repeaters

Repeaters extend the range of a radio network at the expense of speed. Any radio can also serve as a repeater. Set this parameter to 1 if you are using ANY repeaters. All radios in the network must have the same setting.

Master Packet Repeat

With a high quality link, set to 0 or 1 for maximum throughput. With a poor quality link, a higher number will improve getting individual messages though at the expense of speed and throughput. For Modbus networks, this value must be set to 3.

Network ID

This parameter helps avoid conflicts with other radio networks. All radios in the network should be set to the same ID value. Other networks must use a different value. Set this to any value below 4095, except the default (255).

Slave/Repeater

Set to 1 if this radio is a repeater as well as a node on the network. Be sure to set the Modem Mode (Menu #2) to (7) Multipoint Repeater also.

Diagnostics

Set to 1 for this radio to provide diagnostic data back to the Master.

Internal Extra RS-232/RS-485 Port Option

When an internal radio or telephone modem is not required, the internal serial port can be brought out as an extra RS-232 or RS-485 compatible interface with the addition of an optional communications card. A control relay output is provided for power management of the external serial device.

30V 6A FET - ON = Ground, OFF= OPEN

RS-232 Signal	DB 9 Connection	Terminal Block
Carrier Detect	1	
Receive Data	2	2
Transmit Data	3	1
Data Terminal Ready	4	
Ground	5	3
Data Set Ready	6	
Request To Send	7	
Clear to send	8	
RS-485 +		1
RS-485 -		2
Power Control		4

A bank of DIP switches is used to configure the RS-232/RS-485 option. The switches configure the interface signals brought out on the terminal block (RS-232 or RS-485) and select the control signal that operates the power control relay. The switches are accessed via the back controller.

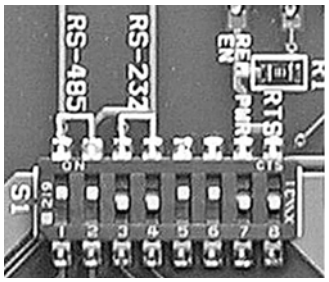

- RS-232 on terminal block Switches 1 & 2 OFF, switches 3 & 4 ON
- RS-485 on terminal block Switches 1 & 2 ON, switches 3 & 4 OFF
- Internal Power control Switch 7 ON and switch 8 OFF
- RTS Power Control Switch 8 ON and switch 7 OFF

Specifications

UNIVERSAL INPUTS

Quantity & Analog Resolution	4, 10 bits (1 part in 1,024)
Signal Input Levels, nominal	0 or 4 to 20mA, 0 or 1 to 5V, 10K Thermistor, variable resistor & contact closure
Input Overload Tolerance	Input current limited to 50mA, Input Voltage limiting at 6Vdc
Overload / Transient Protection	Transorb/Self Resetting Polyfuse
Conversion Rate	Approx. 500 samples/sec. per point (filtering disabled)

ANALOG OUTPUTS

Quantity & Analog Resolution	2, 10 bits (1 part in 1,024)
Output Type	0 or 4 to 20mA

DISCRETE INPUTS

Quantity		10, grouped as 8 and 2		
Input type		Optically isolated with shared isolated commons, AC or DC		
Signal Input Ranges		Range	ON Minimum	OFF Maximum
		12/24V models	9Vac/Vdc	6Vac/Vdc
		120/240V models	75Vac/Vdc	50Vac/Vdc
Maximum input level		50 Vac/Vdc (12/24V models), 250Vac/Vdc (120/240V models)		
DI Pulse Counting Rate	UI #1 and #4	up to 500Hz (50% Duty cycle)		
	DI #5 and #12	up to 40Hz (50% Duty cycle)		
	DI #13 and #14	up to 5 KHz (filtering OFF), up to 40Hz (filtering ON)		

DISCRETE OUTPUTS

Quantity	4
Output type	Relay Contact
Output Configuration	Form A (Normally Open)
Output Rating and Contact Life	
General Use (Resistive Loads)	10Amps @125Vac, 5 Amps @250Vac or 30Vdc - 100,000 cycles
Inductive Loads	10Amps @ 277Vac - 10,000 cycles (COS=0.4)
	1/10HP @125Vac, 1/6HP @250Vac -100,000 cycles
Contact Protection	RC Snubber

COMMUNICATIONS

Serial Ports		2 (+ 1 internal modem / radio)
Communications Baud Rates		300 baud to 230,400 bauid
Serial Port Interfaces	COM #1, COM#3	RS-232, 9 pin D Male
	COM #3	RS-485, Removable Terminal Block, #14 to 26 stranded
Ethernet Port		10Base-T (10 Mb/sec), RJ-45

COMMUNICATIONS OPTIONS (one only per controller)

Internal Spread Spectrum Radios	900MHz, 1W, up to 115Kbaud
	2.4GHz, 0.5W, up to 115Kbaud
Telephone modem w/voice	56K Baud, PC compatible
Serial Comm. Option	RS-232/RS-485 Add-on Port
Cellular Modem	GSM/GPRS Cell Modem
CONTROL & COMMUNICATIONS PROCESSOR	
CPU	Intel 386EX
Memory	8MB Flash, 1MB RAM
Real Time Clock	Dallas DS1689S (IBM/PC comp.)

GENERAL SPECIFICATIONS

Field I/O Wiring Terminations	Removable Terminal Blocks
	Wire Size, #14 to #26 stranded or solid, #12 stranded only
Dimensions	7.0” W x 6.0” L x 2.5” D
	(178mm x 152mm x 64mm)
Power	10 to 26Vac, 10 to 36Vdc
	1.7 Watts typical @ 12vdc (140mA)
	2.0 Watts typical @ 24vdc (85mA)
Operating Temperature	-40°C to 75°C (-40°F to 167°F)
Humidity	5 to 85% RH (non-condensing)

SOFTWARE

IEC 61131-3 (ISaGRAF)	Ladder Diagram (LD)
	Structured Text (ST)
	Sequential Function Chart (SFC)
	Function Block Diagram (FBD)
	Instruction List (IL)
	Flow Chart
SCADABUILDER	Point-and-Click configuration of:
Serial Communications	Modbus RTU/ASCII (Master or Slave)
	DF1 (Master or Slave)
	DNP 3.0 (Master or Slave)
	Bricknet (Peer-to-peer SCADA)
	HART
	NMEA-0183 (GPS)
	PPP
	TAP (alphanumeric pager)
Ethernet Communications	Modbus TCP/IP, HTTP, FTP, TELNET,SMTP
Simple HMI	ANSI/VT100 - serial data links, Telnet over Ethernet
Web Server HMI	ErgoView - Java based
Data and Alarm Logging	up to approximately 7MB
Alarm Dialing	up to 100 tel. # lists, 256 #s/list
	w/pager Numeric or alphanumeric pager
	w/Voice over 14 minutes message capacity

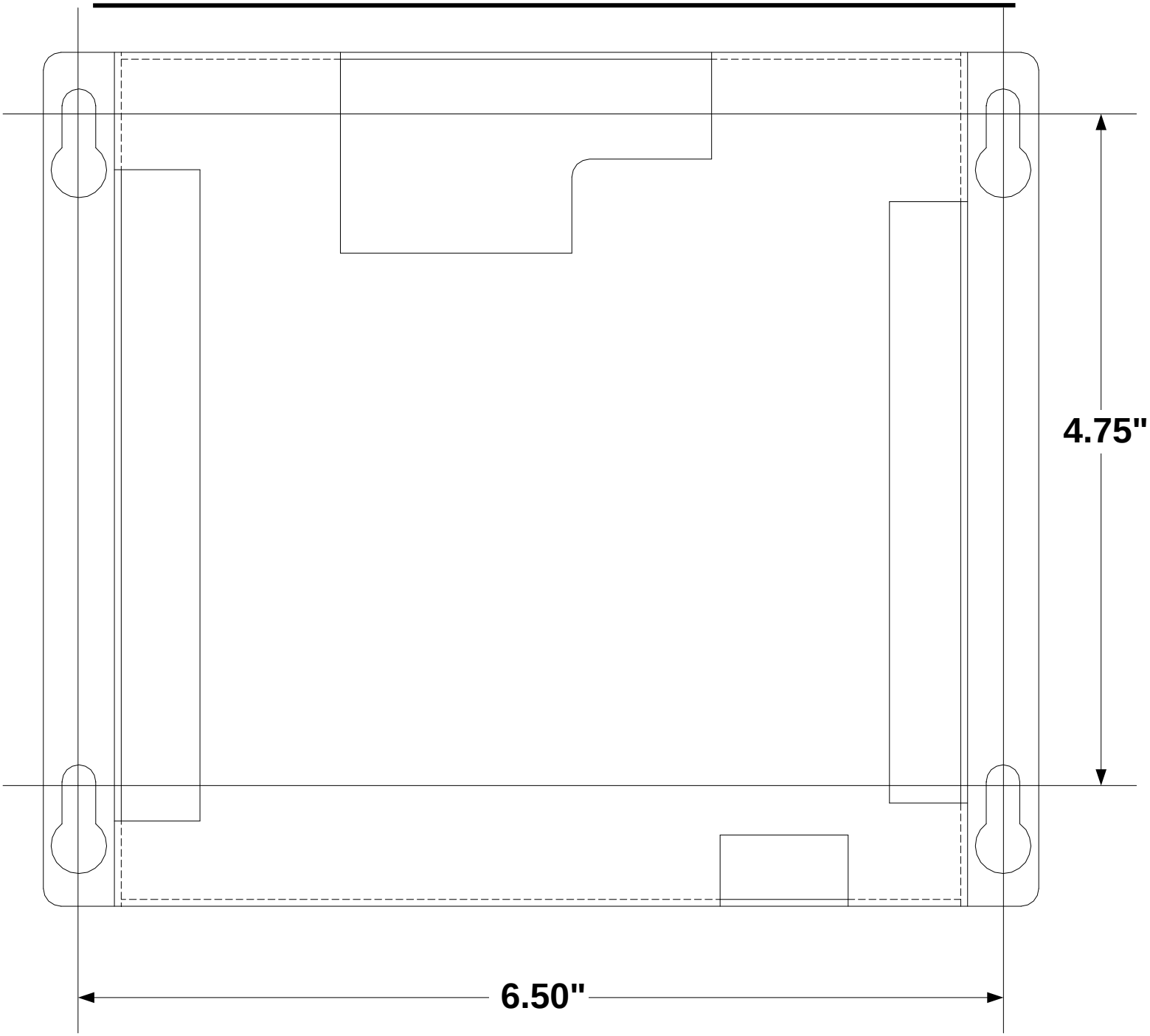

Scale = 1:1
EtherLogic LC Mounting Template

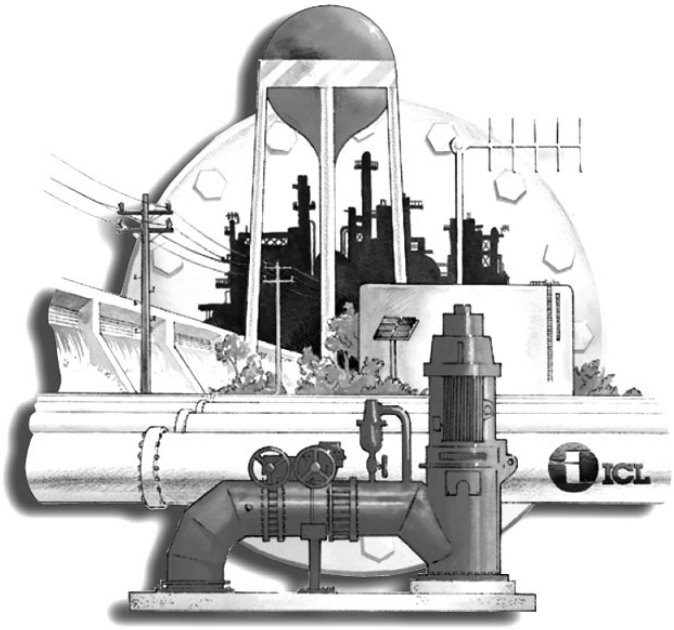

Industrial Control Links, Inc.
12840 Earhart Ave.
Auburn, CA 95602

USA/Canada: (800) 888-1893
International: (530) 888-1800

Fax: (530) 888-1300
(530) 888-7017

E-mail: support@iclinks.com
Web-site: www.iclinks.com

Doc# 60291004 (Rev. D)