Modulus
Standard I/O Modules and Power Supply
Installation and Operation

Copyright Notice

Modulus Installation and Operation Manual

Acknowledgments

ScadaFlex II, Modulus**,** Pinnacle, Everest, Shasta, Lassen, Rubicon, Sentry, Sprite, Solaras, Spectra, ScadaWorks and ScadaBuilder are trademarks of Industrial Control Links, Inc.

Important User Information

Warranty

Industrial Control Links, Inc. warrants that each product that it manufactures will be free of defects in material and workmanship for a period of three (3) years. The warranty commences on the date the product is shipped by Industrial Control Links, Inc. Industrial Control Links, Inc.'s sole liability and responsibility under this warranty is to repair or replace any product which is returned to it by the Buyer and which Industrial Control Links, Inc. determines does not conform to the warranty. Product returned to Industrial Control Links, Inc. for warranty service will be shipped to Industrial Control Links, Inc. at Buyer's expense and will be returned to Buyer at Industrial Control Links, Inc.'s expense. In no event shall Industrial Control Links, Inc. be responsible under this warranty for any defect which is caused by negligence, misuse or mistreatment of a product or for any unit which has been altered or modified in any way. The warranty of replacement shall terminate with the warranty of the product.

Warranty Disclaims

Industrial Control Links, Inc. makes no warranties of any nature of kind, expressed or implied, with respect to the hardware, software, and/or products and hereby disclaims any and all such warranties, including but not limited to warranty of non-infringement, implied warranties of merchantability for a particular purpose, any interruption or loss of the hardware, software, and/or product, any delay in providing the hardware, software, and/or product or correcting any defect in the hardware, software, and/or product, or any other warranty. The Purchaser represents and warrants that Industrial Control Links, Inc. has not made any such warranties to the Purchaser or its agents. INDUSTRIAL CONTROL LINKS, INC. EXPRESS WARRANTY TO BUYER CONSTITUTES INDUSTRIAL CONTROL LINKS, INC. SOLE LIABILITY AND THE BUYER'S SOLE REMEDIES. EXCEPT AS THUS PROVIDED, INDUSTRIAL CONTROL LINKS, INC. DISCLAIMS ALL WARRANTIES, EXPRESS OR IMPLIED, INCLUDING ANY WARRANTY OF MERCHANTABILITY OR FITNESS FOR A PARTICULAR PURPOSE.

INDUSTRIAL CONTROL LINKS, INC. PRODUCTS ARE NOT DESIGNED OR INTENDED TO BE USED IN ANY LIFE SUPPORT RELATED DEVICE OR SYSTEM RELATED FUNCTIONS NOR AS PART OF ANY OTHER CRITICAL SYSTEM AND ARE GRANTED NO FUNCTIONAL WARRANTY.

Indemnification

The Purchaser shall indemnify Industrial Control Links, Inc. and its respective directors, officers, employees, successors and assigns including any subsidiaries, related corporations, or affiliates, shall be released and discharged from any and all manner of action, causes of action, liability, losses, damages, suits, dues, sums of money, expenses (including legal fees), general damages, special damages, including without limitation, claims for personal injuries, death or property damage related to the products sold hereunder, costs and demands of every and any kind and nature whatsoever at law.

IN NO EVENT WILL INDUSTRIAL CONTROL LINKS, INC. BE LIABLE FOR ANY INDIRECT, SPECIAL, CONSEQUENTIAL, INCIDENTAL, BUSINESS INTERRUPTION, CATASTROPHIC, PUNITIVE OR OTHER DAMAGES WHICH MAY BE CLAIMED TO ARISE IN CONNECTION WITH THE HARDWARE, REGARDLESS OF THE LEGAL THEORY BEHIND SUCH CLAIMS, WHETHER IN TORT, CONTRACT OR UNDER ANY APPLICABLE STATUTORY OR REGULATORY LAWS, RULES, REGULATIONS, EXECUTIVE OR ADMINISTRATIVE ORDERS OR DECLARATIONS OR OTHERWISE, EVEN IF INDUSTRIAL CONTROL LINKS, INC. HAS BEEN ADVISED OR OTHERWISE HAS KNOWLEDGE OF THE POSSIBILITY OF SUCH DAMAGES AND TAKES NO ACTION TO PREVENT OR MINIMIZE SUCH DAMAGES. IN THE EVENT THAT REGARDLESS OF THE WARRANTY DISCLAIMERS AND HOLD HARMLESS PROVISIONS INCLUDED ABOVE INDUSTRIAL CONTROL LINKS, INC. IS SOMEHOW HELD LIABLE OR RESPONSIBLE FOR ANY DAMAGE OR INJURY, INDUSTRIAL CONTROL LINKS, INC.'S LIABILITY FOR ANY DAMAGES SHALL NOT EXCEED THE PROFIT REALIZED BY INDUSTRIAL CONTROL LINKS, INC. ON THE SALE OR PROVISION OF THE HARDWARE TO THE CUSTOMER.

Proprietary Rights

The Buyer hereby acknowledges that Industrial Control Links Inc. has a proprietary interest and intellectual property rights in the Hardware, Software and/or Products. The Purchaser shall not (i) remove any copyright, trade secret, trademark or other evidence of Industrial Control Links, Inc.'s ownership or proprietary interest or confidentiality other proprietary notices contained on, or in, the Hardware, Software or Products, (ii) reproduce or modify any Hardware, Software or Products or make any copies thereof, (iii) reverse assemble, reverse engineer or decompile any Software or copy thereof in whole or in part, (iv) sell, transfer or otherwise make available to others the Hardware, Software, or Products or documentation thereof or any copy thereof, except in accordance with this Agreement.

In This Manual…

This manual provides the technical hardware information and configuration instructions required for system design and installation of Modulus Standard I/O modules and Power Supply.

Note: A separate manual provides information on Modulus Advanced I/O modules.

If you have just purchased a Modulus I/O module or power supply, we hope that you are as pleased using it as we have been developing it.

If you are reading this manual looking at a future purchase, we hope that you will consider a SCADA system based on Modulus when you need a complete integrated solution with built-in graphical, LCD, text message and e-mail HMIs, decades of historical trending capacity, alarming, programmable logic, as well as Ethernet, serial, and cellular communications.

Throughout this manual, you will find these icons:

Caution or **Warning**

Usually advises against some action which could result in undesired or detrimental consequences.

Point to Remember

Highlights a key feature, point, or step which is noteworthy. Keeping these in mind will simplify or enhance device usage.

Tip

An idea or suggestion

Support

If you have questions or need help with an application, we hope that you'll take advantage of our free technical support. Simply call us at:

(530) 888-1800

If you prefer e-mail (we do), you can e-mail us at:

support@iclinks.com

For additional technical information including datasheets, manuals and software, visit our web site at:

www.iclinks.com

Your Questions or Comments on this Manual

If you find a problem with this manual, or you have any suggestions for how this manual could be made more useful to you, please contact us at the address below:

Industrial Control Links, Inc.
1364 Blue Oaks Blvd,.
Roseville, CA 95765

530-888-1800

www.iclinks.com

This page intentionally left blank.

Contents

Copyright Notice **2**
Acknowledgments 2
Important User Information **3**
Warranty 3
In This Manual 4
Support **5**
Contents **7**
Modulus Overview **9**
Modulus System Configurations **10**
High-Speed Modulus Bus Configuration 10
Non High-Speed Bus Configuration 10
Ethernet- Serial Bridging 10
Mechanical Installation **11**
Data Bus & Power Interconnection **12**
Distributed Data Bus 12
Powering Modulus Systems 13
Field Wiring **13**
Front Panel **15**
OLED Display and Pushbutton Switch (Local HMI) *15*
LED Status Indicators *15*
Local HMI **16**
I/O Status Screen(s) *17*
User Defined Screen(s) *17*
Module Configuration Screen(s) *18*
I/O and Power Supply Module Wiring **22**
Discrete I/O Modules 23
Discrete Input Wiring *24*
Discrete Output Wiring *24*
Combo I/O Modules 25
Discrete Input Wiring *26*
Discrete Output Wiring *26*
Analog Input Wiring - Process Inputs *27*
Analog Input Wiring - Universal Inputs *28*
Analog Input Wiring - Individually Isolated Analog Inputs *29*
Analog Input Wiring - Additional Universal Inputs (option) *29*
Analog Output Wiring (option) *30*
Serial Port Wiring *30*
Communications Modules 31
Serial Port Wiring *34*
Antenna Wiring (modules with cellular modems or radios) *34*
Discrete/Analog Device Wiring - 2110 ..... *35*
Discrete/Analog Device Wiring - 1120MA *36*
Discrete/Analog Device Wiring - 1120V *37*
Discrete/Analog Device Wiring - 1120R *38*
Reducing System Power Consumption *39*
Cellular Installation *40*
60W Power Supply 42
LED Status Indicators *42*
Power Supply Wiring *42*

Modulus Overview

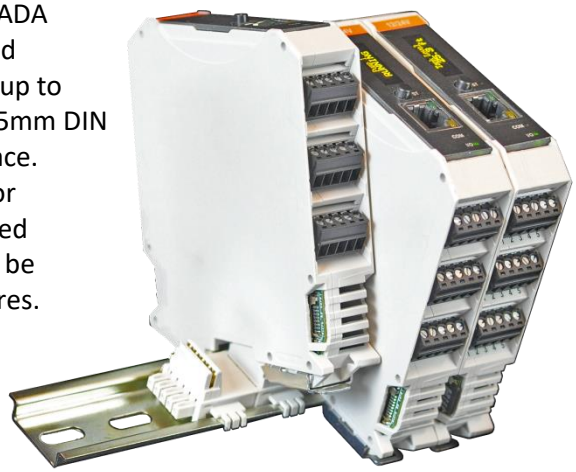

Modulus I/O modules can operate as stand-alone programmable SCADA controllers, or serve as modular I/O expansion that complements and extends the capabilities of a complete multi-module controller with up to several thousand points of I/O. The modules mount on a standard 35mm DIN rail, providing up to 24 I/O points each in less than an inch of rail space. Power and data connections are provided through a clip-in connector mounted on the DIN rail. Multiple of these connectors can be snapped together to form a “backplane” of up to 240 modules. Modules may be distributed over a distance of 1000 ft. using a pair of twisted-pair wires.

Modulus field wiring terminations are removable terminal blocks; either conventional screw type or high-reliability lever type. The later avoids the need for a torque screwdriver to meet UL installation requirements and eliminates the periodic tightening required as maintenance for screw type terminals. Pre-wired field wiring panels are also available that reduce panel wiring time and cost.

Modulus I/O modules have a built-in OLED Human Machine Interface (HMI) display that can be used to view and/or force all I/O states and levels, configure the basic operating parameters of the module, and supports viewing and changing of user defined parameters. A remote pushbutton switch is supported to use the modules HMI in a windowed enclosure. A key switch or badge/card reader can be used to limit HMI access.

Modulus I/O modules have an Ethernet port and at least one serial communications port. The Ethernet port may be used to not only access the local module, but any module on the bus. This eliminates the need for external Ethernet switches. Module access may be controlled by username/password based security.

Every modulus I/O module has a micro SD card slot. A micro SD card may be used for historical trending, backing up and restoring programs and configurations, storage of still and video images from an Ethernet camera, and storage of user and technical documentation for field support.

Every Modulus I/O module can operate autonomously, providing:

- Configurable signal conditioning, totalization, rate calculation and interval measurement.
- Ethernet and RS-485 serial communications (Master and Slave) using industry standard protocols such as Modbus, DF1 and Ethernet IP, as well as user defined communications.
- Communications Concentration
- Long-term historical trending recorded to a Micro SD memory card.
- A web-based graphical HMI
- Programmable Logic (Ladder Logic, Function Block and Text)
- PID control, and pump control with alternation
- Alarming
- Report Generation

Modulus I/O modules come ready to run without configuration (other than I/O bus address if multiple modules are connected together). If configuration is desired to take advantage of the above features, only a standard web browser is required to access the built-in web pages. No special software needs to be purchased or installed.

Support for redundant operation is built into every Modulus I/O module. A Modulus system can be set to automatically switch to a backup module if a primary I/O module stops functioning.

Modulus System Configurations

The bus port of any Modulus module can be configured as a high-speed link to other Modulus modules, or as a standard RS-485 serial communications port to interface with third-party devices. When used as a serial device, a Modulus module can be a ”Master” that initiates message transactions, or a “Slave” that simply responds to commands and requests. When multiple Modulus modules are bussed together, they can be used as addressable RS-485 devices (such as Modbus slaves), or configured to interconnect with each other using a high-speed (megabit) peer-to-peer Modulus bus protocol. Note that both modes cannot be used simultaneously.

Systems with an Advanced Communications or Advanced Combo modules can support up to 240 Modulus I/O modules (up to 5760 I/O points). Systems that do not use an Advanced Modules can support up to 32 Modulus I/O modules (up to 768 I/O points) with an additional 32 redundant backup modules..

High-Speed Modulus Bus Configuration

Interconnected Modulus modules communicate with each other over a high-speed peer-to-peer bus. The I/O modules share I/O and register data over this bus as well as web page and file data. A computer plugged into the Ethernet port of one I/O module can access the configuration web pages and files on any of the other I/O modules in the system (with security controls). No Ethernet switch is required. Likewise, a Cellular Communications module can provide remote access to any of the other modules in a system over the bus. A Modbus TCP/IP device can also access any of the modules in the system on the same IP address. The module or slot address is the Modbus device address. The Modulus system can also be configured as a router so that devices plugged into the Ethernet port of one module can access devices plugged into the Ethernet port of another module. Multiple connected Ethernet networks can be kept fully isolated, or configured with securely limited bridging and routing between them.

For multiple nodes, Modulus modules can be interconnected with a dual twisted pair cable. When set for the highest speed (normal operation), the bus can extend for up to 200 feet end-to-end. At reduced speeds, it can extend over 1000 feet end-to-end. The configuration web pages and files of any module on the bus can be accessed from any Ethernet port or Cellular Communications module in the system.

Non High-Speed Bus Configuration

Modulus modules can also be used as conventional I/O devices, using Modbus RTU, DF1 (Allen Bradley) or SDX (AES-128 encrypted) RS-485 communications. In this mode, the web pages and files of each module cannot be accessed over the bus, so an external Ethernet switch may be needed for multiple module systems. Any Modulus module can serve as a Master in this configuration, talking to other Modulus modules a slaves, as well as any third party external slave devices. Likewise, a third party Master device (such as an HMI panel or software package) can communicate with all of the modules as slaves.

Ethernet- Serial Bridging

Modulus modules can act as Ethernet to Serial bridges. An Ethernet Master plugged into the Ethernet port of any module can bridge to the bus serial port (in RS-485 mode), communicating with external serial slave devices as well as the other Modulus modules. Ethernet to Serial Bridging is also supported to any general purpose serial communications ports on Combo and Communications modules.

Mechanical Installation

Modulus modules should be installed in an electrical enclosure of the appropriate NEMA rating for the environment that they are being used. The modules must be installed on a standard 35mm DIN rail. The modules have a claw that hooks onto the top of the DIN rail, and a spring-loaded metal clip that snaps onto the bottom of the rail.

A minimum clear space of at least 2 inches is required above and below the module mounted as shown on the right. This will allow for hinging the module's mounting "claw" on the top edge of the DIN rail and rotating the module to lock onto the bottom edge of the rail. This also allows ample room for free insertion and removal of the plug-in terminal blocks and any antenna connector (on some communications modules). Note that analog and discrete I/O terminal blocks plug in at an angle, but communications I/O terminal plugs extend directly out from the module and typically require a little extra room for easier access.

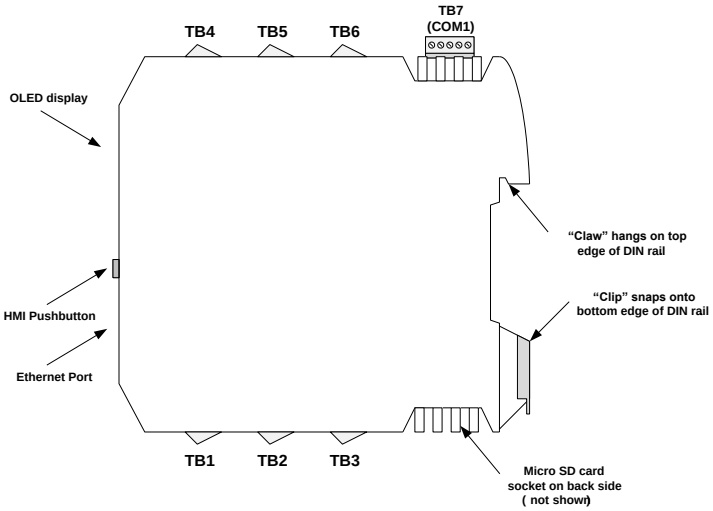

Typical Modulus I/O Module with I/O and Comm Connectors

Please consult the module datasheets for mechanical dimensions.

Installation Hint: Hook the claw of the module onto the top edge of the rail **completely** (rail edge fully into the claw) before trying to start rotating the module down to its locking position.

Modulus I/O and Communications modules depend on convection cooling. Airflow through the modules must not be impeded by wire troughs, dense wire bundles, and other devices in the enclosure. The modules are designed to be mounted in a vertical orientation on a horizontal DIN rail. Avoid mounting Modulus modules above heat generating devices.

Modulus modules may be mounted horizontally on a vertical DIN rail, but the maximum ambient temperature rating must be derated by 10°C under these circumstances.

Data Bus & Power Interconnection

Modulus modules can be joined together with a flexible bus consisting of snap-together connectors that clip into a standard 35mm DIN rail. Up to 240 I/O modules can be connected together in this fashion.

Modulus Bus Connector

The bus connections provide:

- DC power to the modules
- A high-speed data connection between the modules
- A master reset signal (ground to reset all modules)

These signals are available on both the left-hand and right-hand sides. The bus connectors feed the data and power connections through, so power, data and reset signals may be supplied from either end.

Distributed Data Bus

A Modulus controller can be a single entity like a PLC, or it can be physically distributed across multiple electrical enclosures. The bus can be distributed over 200ft. in high-speed mode, 500ft. in medium speed mode, and 1000ft. in low-speed mode. Use two pairs of shielded twisted-pair wires to interconnect clusters of modules; one for data, the other for reset and ground. We recommend low-capacitance RS-485 cable such as **Belden #9842**.

When groups of modules are distributed, power should NOT be distributed. Use local power supplies at each location. Even though power is not distributed, a ground wire, not connected to earth ground, **must** be used to link remote modules together.

When multiple modules are tied together, the data bus is normally configured as a high-speed (1 mb/s) RS-485 peer-to-peer network. Alternatively, the data bus may be configured as a standard RS-485 serial communications network running standard protocols such as Modbus and DF1 at lower standard baud rates.

Powering Modulus Systems

Modulus systems may be powered using an external DC power supply (12V or 24V) connected to the power terminals on a bus connector on either end. They may also be powered by a Modulus power supply module that snaps onto the bus like the rest of the I/O modules (the power supply is the width of two standard I/O modules). When a Modulus power supply is used, the bus power terminals become power outputs that can be used to power external devices and analog loops. Multiple Modulus power supplies may be installed for redundancy.

Once the power and data connections are complete, the modules can be powered and configured via their front panel HMIs (see Local HMI section) or by accessing their built-in configuration web pages. At the very least, make sure that each module has a unique "slot" address.

Field Wiring

Modulus modules are available with either traditional screw type terminal blocks (part numbers starting with 81-xxxx), or lever type blocks (part numbers starting with 82-xxxx). Lever type blocks do not require a torque screwdriver in order to meet UL installation requirements and do not require periodic tightness checks as preventive maintenance.

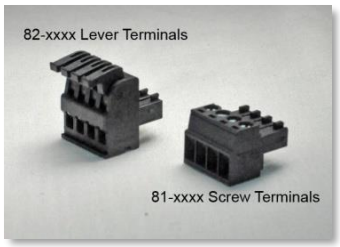

Screw terminal block terminals must be tightened to **3lb-in** to meet UL panel wiring requirements.

A third option is to purchase the modules without terminal blocks (part numbers starting with 80-xxxx), and use pre-wired DIN rail mounting Field Wiring Panels. These have pre-wired cables with lever type terminal blocks that plug into the I/O modules, and larger terminal blocks ready for an electrician to land pair of wires from field devices. Laser printable waterproof labels are available that fit in place just in front of the terminal block connections. A Microsoft Word template is included to make label creation fast and easy.

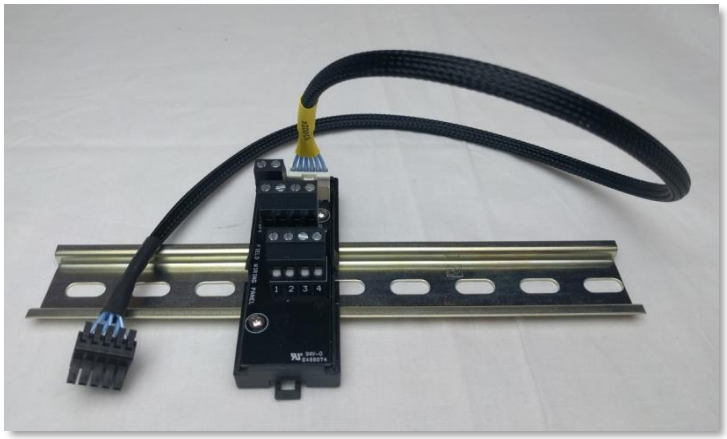

A finished panel wired with Field Wiring Panels is pictured on the right: All signal wiring was done with pre-wired Field Wiring Panels. The only other wiring was AC and DC power.

The wiring for individual modules is described in later sections of this manual.

Front Panel

The front panel of every Modulus module includes an OLED display, a pushbutton switch, several LED status indicators, and an Ethernet connector.

OLED Display and Pushbutton Switch (Local HMI)

The OLED display is used to show I/O and communications status. It may also be configured to display and optionally change setpoints and other values stored in registers. The display can be set to automatically turn off when not being used (recommended). When the display goes off, pressing the pushbutton will turn it on again, along with the displays on any other modules on the bus.

The pushbutton is used to sequentially select any parameters that have been configured to be viewable by the user. It may also be used to change any values configured to be changeable. For additional details on the front panel HMI operation, please refer to the Local HMI section of this manual.

LED Status Indicators

Three bi-color (red/green) LED status indicators on the front panel provide status information for communications, analog and discrete I/O, and CPU operation as follows:

During normal operation (running) . . .

ST: Status

Green Blinks once every 3 seconds if not alarming. The duration of the on state is proportional to the Program Scan time

Red Blinks when alarming.

COM: Communication

Green when there is no fault.

Red on solid when there is a communication failure
blinking when there is a communication configuration error.

IO: Local IO

Green on solid if no faults or forcing.
blinking if any IO is forced.

Red on solid if any IO is in a fault state (such as DO short, open or over-temperature).
Blinking if any analog value is outside of its alarm range.

At power-on or reset (before normal operation) . . .

Condition	***ST LED***	***COM LED***	***IO LED***
Bootloader startup	GRN/RED	GRN/RED	GRN/RED
Bootloader listen	GRN/RED slow cycle		
Bootloader programming CPU memory	GRN/RED fast cycle		
Main Code startup	RED		
Full Factory Defaults being written		RED	RED

Local HMI

The built-in front panel OLED display and a pushbutton serve as a local Human Machine Interface (HMI). The pushbutton is used to select (short presses) and optionally edit values (long presses > 2 seconds). Long presses are also used to "escape" back to the first I/O screen.

The HMI is used to:

- View I/O Status
- View and optionally change user defined variables
- View and optionally change basic module configuration parameters

When installing multiple Modulus modules on a bus, you must assign a unique "slot" number or address to each module. Two modules set to the same address on the bus will cause a conflict that will hinder proper bus communications.

When the module powers up, the I/O status screen is displayed. If configured, short presses will cause user variables and setpoints to be displayed sequentially, and optionally changed. If the HMI pushbutton is held for a long press (several seconds) while displaying the I/O status, configuration screens for viewing and setting system type parameters will be displayed sequentially , optionally changed. For example, this is the way that the modules IP and bus "Slot" addresses are viewed and set.

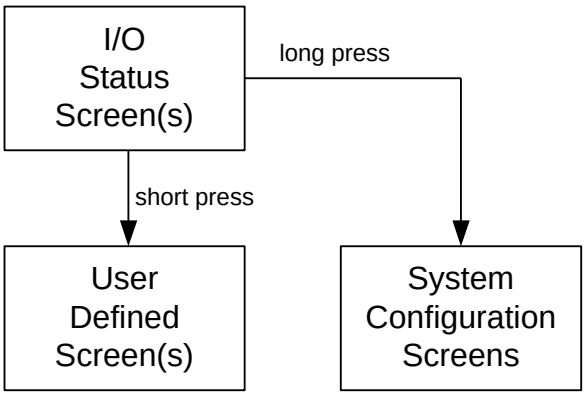

Modulus I/O modules can be configured to display up to 50 user defined variables on the local HMI display. These can be the values stored in any I (numeric) or B (Boolean) registers, or any I/O values. As part of the HMI configuration process, these values may be made "read only" or writable (except for digital and analog inputs), and displayable in a sequential automatic "scan" when the scan mode is enabled.

Short presses after the I/O status screen(s) are displayed shows the user defined information, one item per "page". A long press on any of these screens puts that value into edit mode if it has been marked as writable (see Local HMI Editing). After the last user defined variable has been displayed, the next short press of the HMI button returns to the I/O status screen(s).

When the I/O status screen(s) are displayed, a long press jumps to the basic system configuration screens. These screens can be used to view and set the basic communications settings for the I/O modules Ethernet port, bus port, and to force any of the local I/O. There are also screens to do a full image backup and restore of the module firmware and configuration to/from local storage without an attached computer, as well as a several screens to display the current firmware revision information and serial number of the module, and to reset the local module or the other modules on the bus.

The HMI display has an typical life (to half brightness) of 50,000 hours. The display may be set to automatically turn off when it is not used. Pressing the HMI button "wakes up" the screens on all modules on the bus.

I/O Status Screen(s)

After power up, the first screen displayed on the local HMI is I/O status. Additional I/O and communications status is shown on subsequent screens selected by pressing the HMI pushbutton.

The status of the discrete input and output points are displayed as dots (off) and filled in squares (on). The discrete input status is always displayed first, followed by discrete output status.

The status of analog inputs and outputs are displayed as 2-digit numbers from 0 to 99%, or LO or HI for levels that extend below or above the configured normal operating range (i.e. below 4 mA or above 20mA on a 4 to 20mA loop). The HI and LO limits are configurable on the I/O web pages.

Communications status is shown in two columns labeled T (transmit) and R (receive). The ports are labeled along the left hand side: (B) Bus, (1) (Com 1), etc. On communications modules, the ports used for cellular modules and radios are labeled (C) and (R) respectively.

User Defined Screen(s)

User defined screens display I/O and register values scaled to engineering units and with descriptive tag names and units labels. One variable is shown per screen. Each item to be displayed is selected on the Local HMI configuration web page in the module. Note the Write Enable and Scan Enable checkboxes:

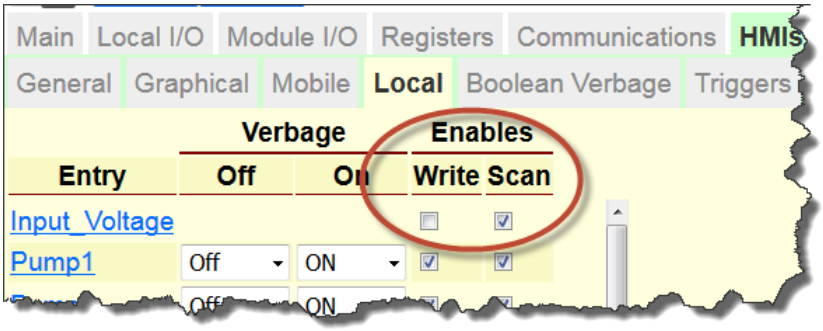

The Write Enable checkbox allows the value to be edited from the HMI (unless the item is not changeable such as input voltage). The Scan Enable checkbox enables the value to automatically be displayed with other values in a periodic scan when the scan mode of the HMI is enabled (see System Configuration screens).

Module Configuration Screen(s)

The Local HMI may be used to configure some of the most basic operating parameters of the module without accessing the modules web pages. These include:

- HMI Cycle Mode
- I/O Bus ("slot") Address
- Baud Rate (RS-485 mode)
- Backplane (I/O Bus) Mode
- Ethernet IP address
- Ethernet DHCP Server Enable
- I/O Forcing
- HMI Display Timeout
- Firmware Version
- Module serial number
- Reset Factory Defaults
- Write firmware and configuration backup to local storage
- Restore firmware and configuration backup from local storage
- Reset Unit
- Reset Bus
- <home>

HMI Cycle Mode

```
Cycle Mode
    off
```

Enable this mode to cause the HMI display to sequentially display user defined registers (configured for "scan" mode) at approximately 1 second per item.

I/O Bus ("slot") Address

```
Slot Address
           1
```

Every Modulus I/O module must have a **unique** address between 1 and 240 to be accessed by other modules in the system. Single module systems do not need to set this parameter.

Baud Rate

```
Baud Rate
  115,200
```

If the Modulus Bus Port is used as a conventional RS-485 communications port, then this parameter sets the ports baud rate. This parameters is not used for the fast, medium or slow bus modes.

Backplane (I/O Bus) Mode

```
Backplane Mode
FAST BUS
```

Modulus modules have a high-speed 2-wire "backplane" bus that links them together for data communications. Backplane communications can run at high-speed up to 200ft. of twisted pair cable, or at lower speeds up to 1000ft. If this port is not used for bus communications between modules, it may be configured as a conventional RS-485 port that runs standard serial protocols such as Modbus, DF1 and SDX. The available selections are FAST BUS (up to 200ft., factory default), MEDIUM (up to 500ft.), SLOW (up to 1000ft.), or RS-485 (conventional RS-485 serial port that operates up to 115Kbaud).

Ethernet IP address

```
IP Address
192.168.237.199
```

This is the IP address of the local Ethernet Port. 192.168.237.199 is the factory default address.

Ethernet DHCP Server Enable

```
DHCP Server
off
```

Devices that access a Modulus module through the Ethernet port (such as a PC computer) must have a compatible IP address. This can be a fixed address manually entered into the device, or an address served to the device from the Modulus module. Enabling the DHCP Server allows the module to serve addresses to your devices so that you don't have to manually configure them.

DO NOT ENABLE THE DHCP SERVER IN THE MODULUS MODULE IF YOU ARE CONNECTING IT TO A NETWORK THAT ALREADY HAS ANOTHER ADDRESS SERVER (such as your office network). Doing so can crash a network!

I/O Forcing

```
IO
Forcing
```

This selection provides access to sub-menus for forcing any of the local inputs and outputs, overriding readings from the I/O hardware and commands from communications or a logic program.

HMI Display Timeout

```
Display Timeout
              3
```

The modules display can be set to automatically turn off to extend display brightness life (nominally 50,000 hours to half brightness) when there is no HMI activity for the time period setting. The display is restored if the HMI button on any Modulus module in the system is pressed. The specified time is in minutes. Set this parameter to 0 to leave the display always on.

Firmware Version

```
Firmware Ver.
1.01.06 B160
```

Module serial number

```
Serial Number
   123456
```

Reset Factory Defaults

```
Reset Factory
  Defaults
```

Use this setting to restore all module configuration settings to their factory defaults. There is a confirmation prompt after this screen to make sure that you really want to overwrite everything that you have configured.

Write firmware and configuration backup to local storage

```
Write Internal
   Backup
```

Use this setting to make a backup of the module configuration to a micro SD memory card. This can provide a "safety net" if you make a backup before you make changes to the configuration that you later regret. It can also be used to create a backup for "cloning" the modules configuration to another module.

Restore firmware and configuration backup from local storage

```
Load Internal
   Backup
```

Use this setting to restore a previously saved configuration backup. This can be used to "clone" a configuration from a micro SD memory card.

Reset

This setting is equivalent to power cycling the module.

Reset Bus

This setting is equivalent to power cycling all of the other modules on the bus.

<home>

<home>

This setting is used to return to the initial I/O status screen. You can do the same thing by simply doing a long press at any configuration screen.

I/O and Power Supply Module Wiring

Modulus consists of three types of standard I/O modules and a power supply module:

Discrete Input and Output	Optically Isolated Inputs and Relay Outputs
Combo Input and Output	Optically Isolated Inputs, Relay Outputs and Analog I/O
Communications	Serial Ports, some Analog and Discrete I/O, and built-in radio and cellular options
60W Power Supply	Regulated DC Power Supplies that can be installed redundantly on the bus

The following section describes the unique functionality of each type of standard I/O module and the wiring of sensors and control devices to them.

Discrete I/O Modules

Modulus Discrete I/O modules provide 24 points of inputs and outputs to support on/off type input devices such as switches, photoeyes, and proximity, and output devices such as relays, motor starters, solenoids, and indicator lights.

There are for models of discrete I/O modules. They vary only in their mix of inputs and outputs:

DI-24 24 Discrete Inputs and no Discrete Outputs

DIDO-1212 12 Discrete Inputs and 12 Discrete Outputs

DIDO-1608 16 Discrete Inputs and 8 Discrete Outputs

DIDO-2004 20 Discrete Inputs and 4 Discrete Outputs

The Discrete Inputs are optically isolated, grouped in fours with a common connection shared between the four inputs within a group but isolated from the rest of the module. The inputs are not polarity sensitive and can support both AC and DC signals.

Discrete Input modules can be ordered with 12/24V or 120/240V inputs. The first eight Discrete Inputs of an module can respond to input pulses of up to approximately 4Khz with built-in totalization, rate, and interval measurement. Configurable filtering can be set to counter noise and contact bounce. The remaining inputs can be set to respond to signals of up to 100Hz.

The Discrete Outputs are relays with normally open contacts rated to drive loads of up to 3 amps. They are grouped in fours with a common connection shared between the four outputs within a group but isolated from the rest of the module.

Discrete I/O Module Wiring

Modulus Discrete I/O modules have six terminal blocks of four points each for field wiring. The terminal blocks are labeled TB1 through TB6 as shown below.

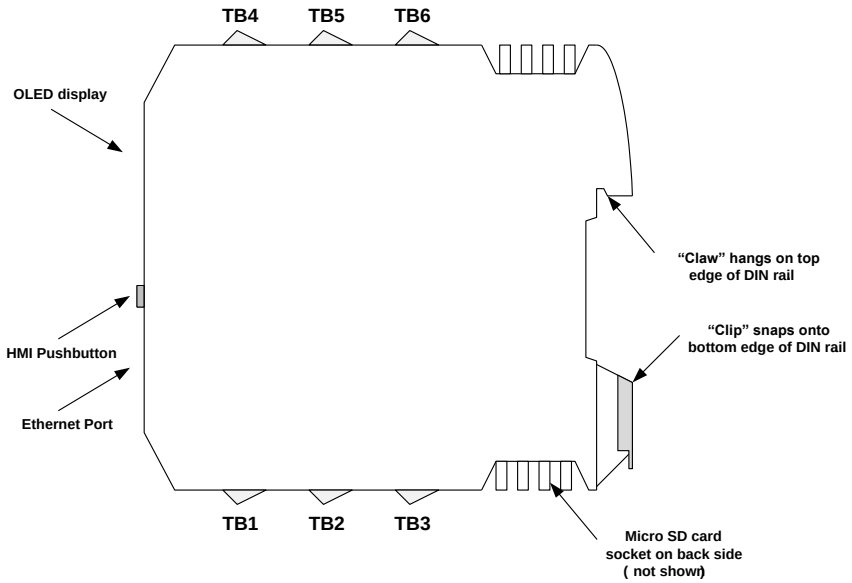

Discrete I/O Modules

The assignment of inputs and outputs to terminal blocks for each Discrete I/O module type is shown below

	TB1	TB2	TB3	TB4	TB5	TB6
DI-24	**DI 1** to **DI 4**	**DI 5** to **DI 8**	**DI 9** to **DI 12**	**DI 13** to **DI 16**	**DI 17** to **DI 20**	**DI 21** to **DI 24**
DIDO- 1212	**DI 1** to **DI 4**	**DI 5** to **DI 8**	**DI 9** to **DI 12**	**DO 1** to **DO 4**	**DO 5** to **DO 8**	**DO 9** to **DO 12**
DIDO- 1608	**DI 1** to **DI 4**	**DI 5** to **DI 8**	**DI 9** to **DI 12**	**DI 13** to **DI 16**	**DO 1** to **DO 4**	**DO 5** to **DO 8**
DIDO- 2004	**DI 1** to **DI 4**	**DI 5** to **DI 8**	**DI 9** to **DI 12**	**DI 13** to **DI 16**	**DI 17** to **DI 20**	**DO 1** to **DO 4**

Discrete Input Wiring

All discrete inputs are optically isolated and polarity insensitive. The wiring connections to field devices are terminated on 5-position terminal blocks with terminals 1 through 4 connected to the field devices. Terminal 5 is the common connection for the four inputs.

Typical Discrete Input wiring is shown in the diagrams below.

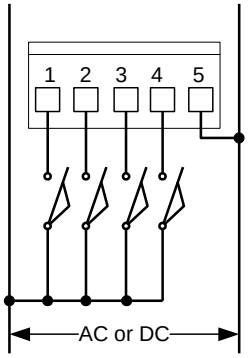

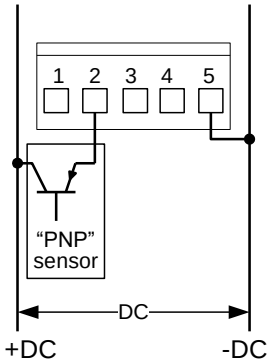

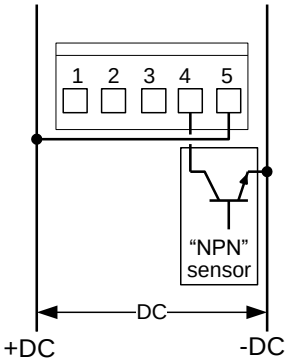

Discrete Output Wiring

All discrete outputs are "dry" relay contacts. The wiring connections to field devices are terminated on 5-position terminal blocks with terminals 1 through 4 connected to the field devices. Terminal 5 is the common connection for the four outputs.

Typical Discrete Output wiring is shown in the diagrams below. Note that when driving inductive loads such as relays, motor starters and solenoids, external snubber devices must be used across these loads to minimize contact damage and radiated noise from arcing. Resistor/capacitor snubbers may be used for AC loads, while diodes or snubbers may be used for DC loads as shown below.

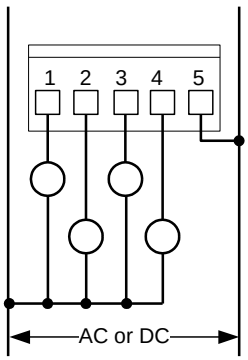

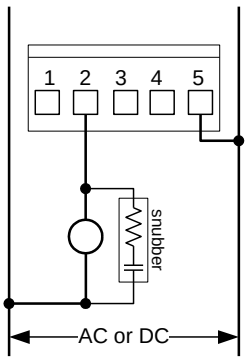

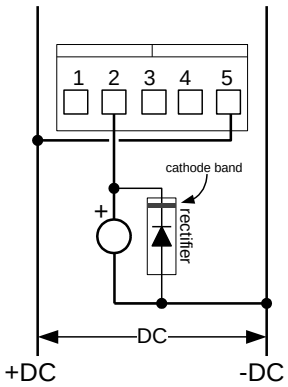

Combo I/O Modules

Modulus Combo I/O modules provide a mix of up to 24 discrete inputs and outputs, and analog inputs and outputs, and an extra serial port.

Discrete I/O

Modulus Combo I/O modules provide 8 Discrete Inputs and 4 Discrete Outputs to support on/off type input devices such as switches, photoeyes, and proximity, and output devices such as relays, motor starters, solenoids, and indicator lights.

The Discrete Inputs are optically isolated, grouped in fours with a common connection shared between the four inputs within a group but isolated from the rest of the module. The inputs are not polarity sensitive and can support both AC and DC signals. The Discrete Inputs can be ordered as 12/24V or 120/240V inputs. All Discrete Inputs can respond to input pulses of up to approximately 4Khz with built-in totalization, rate, and interval measurement.

The Discrete Outputs are relays with normally open contacts rated to drive loads of up to 3 amps. The outputs share a common connection that is isolated from the rest of the module I/O points and electronics.

Analog I/O

Combo I/O modules can have up to 12 analog input and output points; 8 inputs with an optional 4 additional inputs or outputs. The analog inputs can ordered support as just standard process signals of current and voltage, or universal inputs that include signal conditioning for sensors such as thermocouples, thermistors, and RTDs. The analog inputs are available with a single isolated analog common, or individually isolated.

An additional 4 analog inputs, or 4 analog outputs, can be added. The additional inputs are universal type that support process devices as well as temperature sensors, except for RTDs. The analog outputs are 20mA type.

Serial Port

In addition to their bus port, Combo modules have an additional general purpose serial communications port. This port maybe software configured for RS-232, RS-485, RS-422 or SDI-12 operation that may serve as either a "master" that initiates messages, or as a "slave" that responds to commands and requests from a master. Standard industrial protocols such as Modbus, DF1 (Allen Bradley), SNP (GE) and SDI-12 (low-power sensor protocol) are supported.

Combo Module Wiring

Modulus Combo I/O modules have up to seven 5-position terminal blocks for field wiring termination. TB1 through TB5 is standard for all module configurations. TB6 is used for additional (optional) analog inputs and outputs. TB7 is for the extra serial communications port.

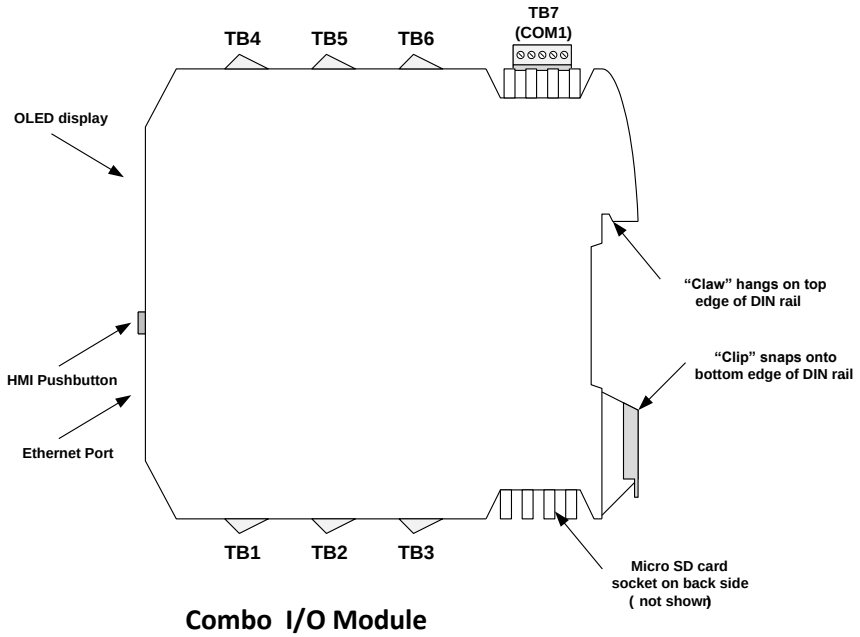

Combo I/O Module

Discrete Input Wiring

TB1 and TB2 are for the Discrete Inputs; TB1 is inputs 1 through 4, TB2 is inputs 5 through 8. All discrete inputs are optically isolated and polarity insensitive. The wiring connections to field devices are terminated on 5-position terminal blocks with terminals 1 through 4 connected to the field devices. Terminal 5 is the common connection for the four inputs.

Typical Discrete Input wiring is shown in the diagrams below.

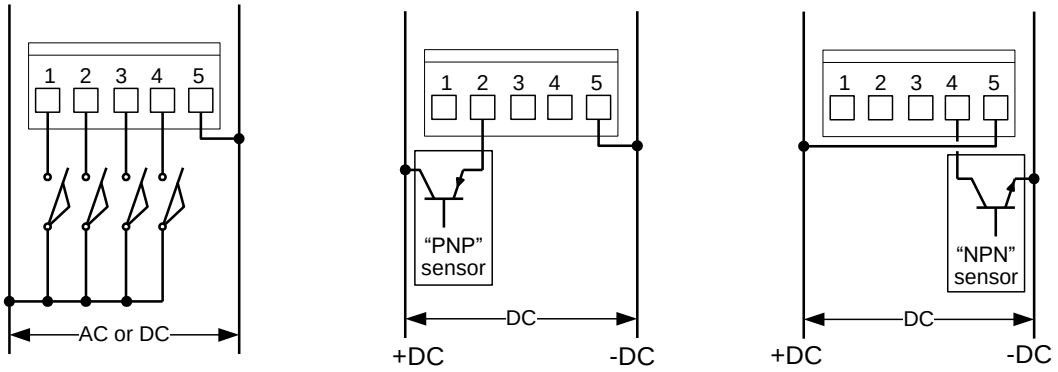

Discrete Output Wiring

TB3 is for the Discrete Outputs which are "dry" relay contacts. The wiring connections to field devices are terminated on 5-position terminal blocks with terminals 1 through 4 connected to the field devices. Terminal 5 is the common connection for the four outputs.

Typical Discrete Output wiring is shown in the diagrams below. Note that when driving inductive loads such as relays, motor starters and solenoids, external snubber devices must be used across these loads to minimize

contact damage and radiated noise from arcing. Resistor/capacitor snubbers may be used for AC loads, while diodes or snubbers may be used for DC loads as shown below.

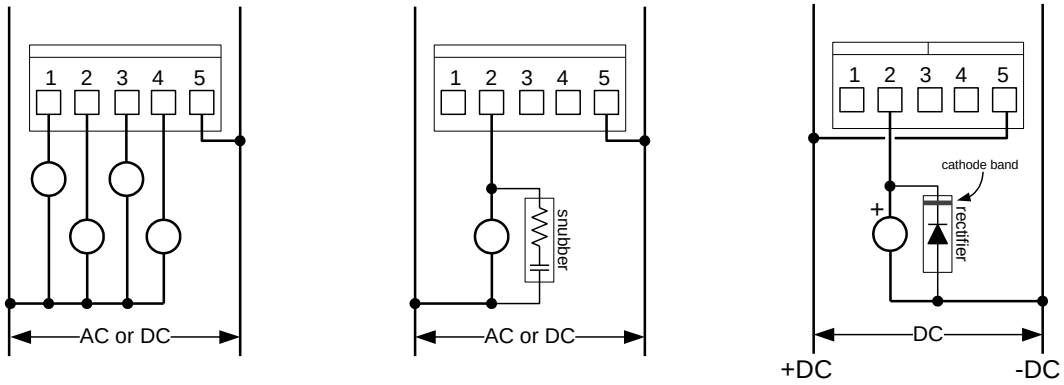

Analog input Wiring

Modulus Combo I/O modules have up to three 5-position terminal blocks for field wiring termination of analog signals; TB4 and TB5 for the primary analog inputs, and TB6 for the optional additional 4 analog inputs or outputs.

Analog Input Wiring - Process Inputs

Combo I/O modules support measurement of up to 8 process analog signals on the primary analog inputs for both process and universal inputs models. TB4 is for inputs 1 through 4, while TB5 is for inputs 5 through 8. Each terminal block has 5 terminals. Terminals 1 through 4 are connected to the field devices and terminal 5 is the common connection for the four inputs. The commons of the two terminal blocks are tied together (all 8 inputs share a common connection) but are isolated from the best of the module electronics.

Typical Process Analog Input wiring is shown in the diagrams below.

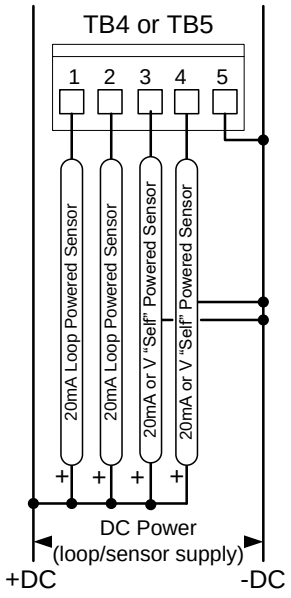

Analog Input Wiring - Universal Inputs

Combo I/O modules can be ordered with "Universal Inputs", that in addition to supporting process signals as described above, have software selectable signal conditioning to support thermistors, thermocouples, RTDs and general resistance measurement. TB4 is for inputs 1 through 4, while TB5 is for inputs 5 through 8. Each terminal block has 5 terminals. Terminals 1 through 4 are connected to the field devices and terminal 5 is the common connection for the four inputs. The commons of the two terminal blocks are internally tied together (all 8 inputs share a common connection) but are isolated from the rest of the module electronics.

Note that thermocouples must be "ungrounded" type.

Typical Universal Analog Input wiring is shown in the diagrams below.

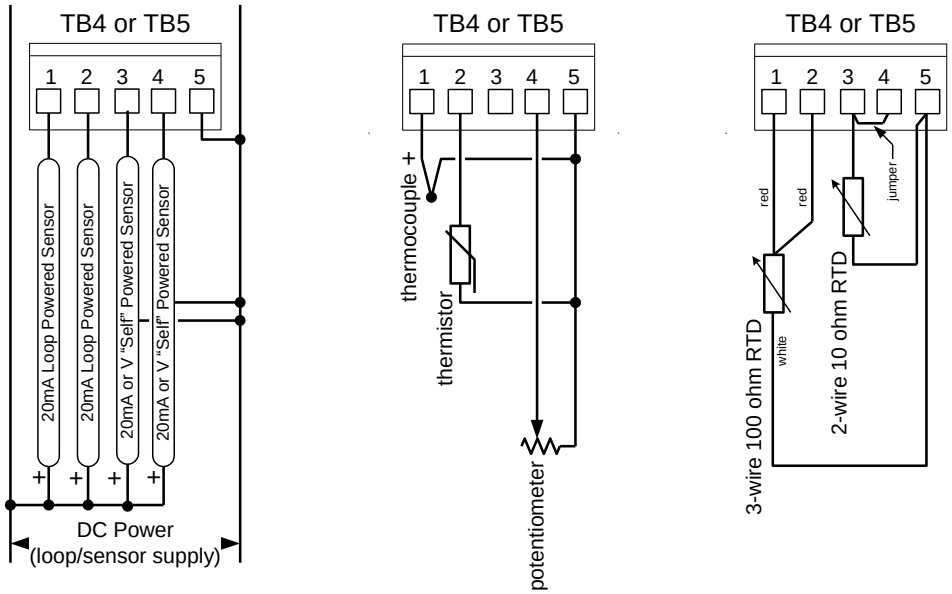

About RTDs

The first eight Universal Analog inputs support both 2-wire and 3-wire RTDs. Each RTD uses 2 analog input connections in addition to the common. RTDs exhibit very little resistance variation for each degree of temperature change. The resistance of the wires connecting to the RTD sensor element are significant compared to the RTD sensor element itself. The Universal analog inputs measure the resistance of one leg of the RTD connection and take the wire lead resistance into account when calculating the measured temperature. Because of this, RTDs require two analog inputs per sensor as shown above. 2-wire RTDs must have a jumper and lead lengths to the sensor element must be kept short to minimize errors due to lead resistance.

Note: 100 ohm 2-wire and 3-wire RTDs are not supported on the optional additional Universal Analog Inputs (TB6).

Analog Input Wiring - Individually Isolated Analog Inputs

Combo I/O modules can be ordered with "Individually Isolated Analog Inputs", where each input does not share a common with any other inputs or the rest of the module electronics. This can solve potential ground loop problems with using external isolators. The individually isolated analog inputs support voltage (up to 100V) and current (20mA) process signals, as well as thermocouples temperature sensors.

Typical Individually Isolated Analog Input wiring is shown in the diagrams below.

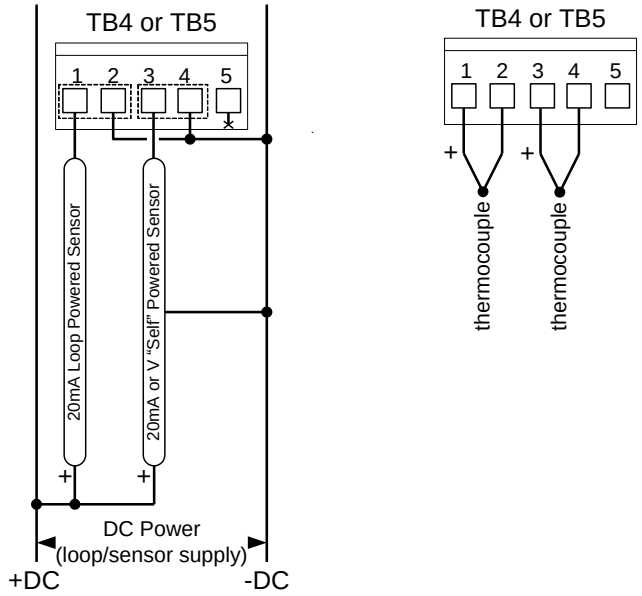

Analog Input Wiring - Additional Universal Inputs (option)

Combo I/O modules can be ordered with 4 additional "Universal Inputs" that support process signals as well as thermistors, thermocouples and general resistance measurement. Unlike other Modulus universal inputs, the additional universal inputs do not support RTDs.

The optional additional universal inputs (9 through 12) are available on terminals 1 through 4 of TB6. Terminal 5 is the common connection for the four inputs, and is isolated from the primary analog inputs as well as the rest of the module electronics.

Typical Universal Analog Input wiring is shown in the diagram below.

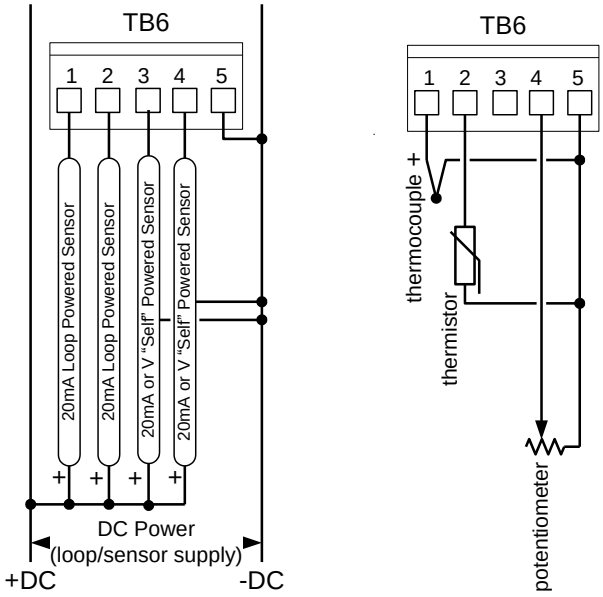

Analog Output Wiring (option)

Combo I/O modules can be ordered with 4 20mA Analog Outputs on TB6 (analog outputs 1 through 4 on terminals 1 through 4). Terminal 5 is the common connection for the four outputs. The common of this terminal block is connected to the power ground of the module electronics. The analog outputs utilize the modules input power for loop power.

Typical Universal Analog Output wiring is shown in the diagram below.

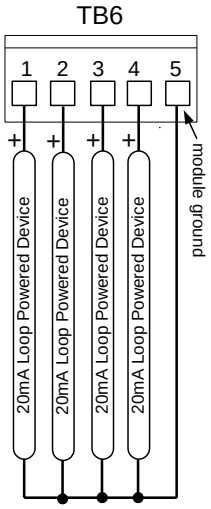

Serial Port Wiring

Combo I/O modules have an additional general purpose serial port which may be software configured as an RS-232, RS-485, RS-422 or SDI-12 hardware interface. Depending on how it is used, the serial port terminal block should be wired as shown below:

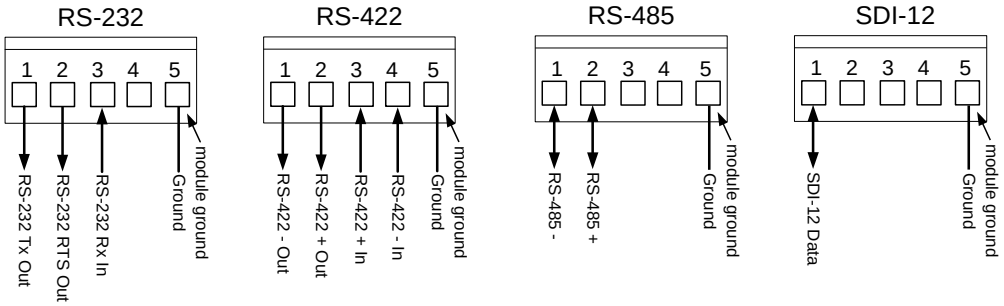

Many RS-232 devices such as radios use "DB9" type connectors. The typical wiring to a DB9 male connector is shown below:

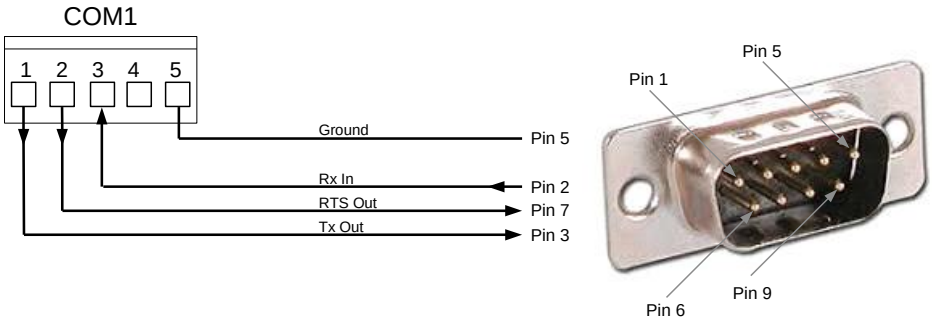

Communications Modules

Modulus Communications modules provide a means of adding serial ports, radios and cellular modems. Communications modules with cellular modems add additional alarming capabilities by text message and e-mail as well as remote access via the Internet.

Serial Ports

Communications modules with an optional wireless device also have one general purpose serial port. The modules without a built-in wireless device have two general purpose serial ports. The general purpose serial port(s) maybe software configured for RS-232, RS-485, RS-422 operation (the first serial port also supports SDI-12 operation). General purpose serial ports may serve as either a "master" that initiates messages, or as a "slave" that responds to commands and requests from a master.. Standard industrial protocols such as Modbus, DF1 (Allen Bradley), SNP (GE) and SDI-12 (low-power sensor protocol) are supported.

Please note that modules with a second general purpose serial port do not support SDI-12 on that port.

Discrete and Analog I/O

Modulus Communications modules provide a small amount of local Discrete and Analog I/O that can significantly reduce the cost of small applications such as tank monitoring and single pump well control by eliminating the need for any additional I/O modules. The available I/O is offered in four configurations:

2110 2 Discrete Inputs, 1 Discrete Output, and 1 Analog Input, configurable for voltage or current operation

1120MA 1 Discrete Input, 1 Discrete Output, and 2 Analog Inputs (current)

1120V 1 Discrete Input, 1 Discrete Output, and 2 Analog Inputs, (voltage)

1120R 1 Discrete Input, 1 Discrete Output, and 2 Analog Inputs, (resistance & resistive temperature sensors)

The Discrete Inputs are high-speed type(>20KHz) with configurable digital filtering. They accept contact closures and open collector signals that switch to ground ("NPN" sensors), or DC input levels of up to 30Vdc. They include built-in rate and interval measurement and pulse totalization.

The Discrete Outputs are protected FET (Field Effect Transistor) type that switch the incoming DC power to their output load. They are rated to drive loads of up to 2 amps. They are protected against transients, as well as current and thermal overloads. A status and alarm bit is provided for the later two faults as well as an open circuit (loss of load).

The Analog Inputs are high-resolution (16-bit) inputs protected from shorts and transients (lightning protection, if required, should be provided externally). Each input has software configurable digital filtering as well as low and high alarm setpoints.

- Milliamp inputs accept standard 4 to 20mA process signals.
- Voltage inputs accept 5V, 10V, +/-5V, +/-10V and 30V inputs (software selected).
- Resistance inputs measure resistance up to 65,535 ohms and include linearization for several different types of thermistor temperature sensors.

Wireless Options

Modulus Communications modules are available with a choice of a built-in conventional spread spectrum radios, a meshing radio, or two different cellular modems.

Spread Spectrum Radio Options

The built-in spread spectrum radio options provide the best sensitivity for the longest single "hop" range. They are available in 1/4 watt and 1 watt variations. Wireless communications modules can be configured to act as repeaters to achieve longer effective ranges is needed.

Meshing Radio Option

The built-in meshing radio option provides somewhat reduced sensitivity compared to the optional spread spectrum radio option, but automatically forms a self-healing "mesh" that can use any other available site as a repeater if a message cannot get through directly. No manual repeater functionality needs to be configured, and if a repeater site goes down, the rest of the sites will automatically attempt to get their messages through using a different path.

Cellular Options

Cellular Communications modules provide remote connectivity to the Internet, allowing for remote configuration and support of any Modulus I/O module in the system, with security protections to limit access. Cellular modules eliminate many of the range anxiety problems associated with radio based systems and typically require less antenna infrastructure which offsets the monthly carrier data charges. There are two models of Cellular Communications modules; one for Verizon networks, and for AT&T, T-Mobile and most all International networks. Both models are 4G LTE devices.

Although all Modulus I/O modules support alarming, Modulus Cellular communications modules enable the alarms to be annunciated and acknowledged by text message or e-mail over a cellular network, and ultimately, the Internet. The cellular module acts as an alarm server for all modules in a Modulus system, supporting the annunciation of hundreds or thousands of alarm conditions distributed across all of the modules on the bus. The Cellular Communications module maintains a spreadsheet journal of every alarm in the system, when they occurred, who was alerted, when they were acknowledged, and when each alarm condition clears.

Communications Module Wiring

Modulus Communications modules have one or two serial port terminal blocks (depending on whether they have an internal wireless option) and a single Discrete and Analog I/O terminal block.

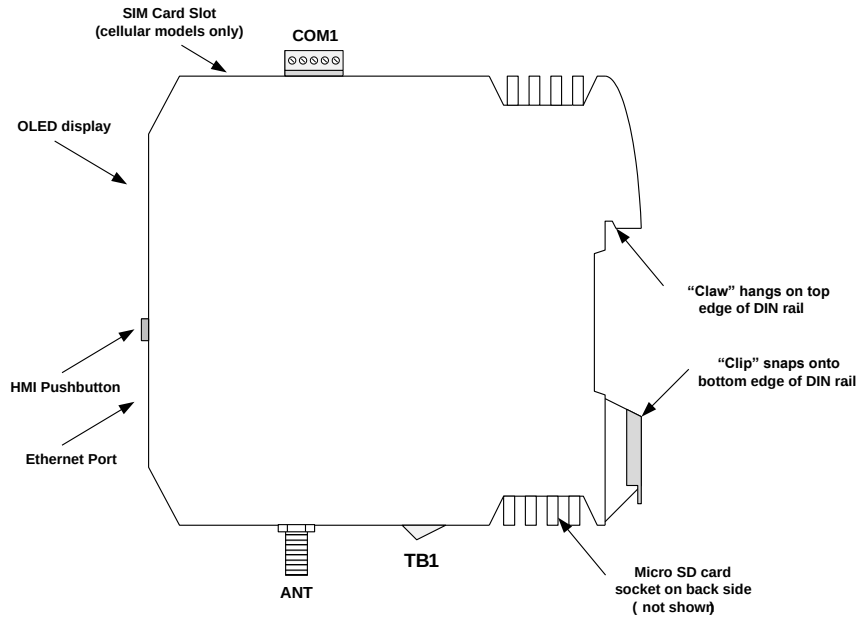

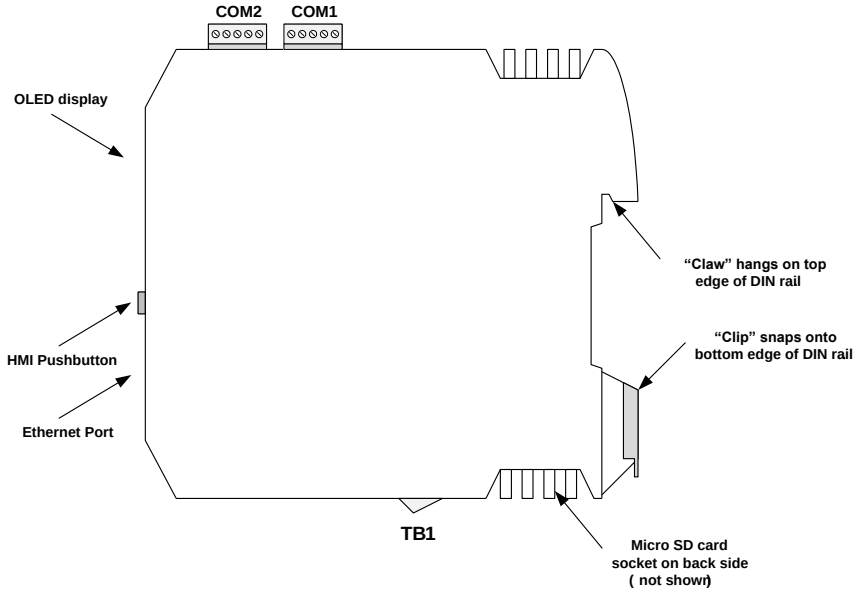

Communications I/O Modules (with and without built-in wireless options)

Note: On early shipments of communications modules, the positions of the serial port connectors and antennas were slightly different, but labeled properly and wired in the same manner as shown.

Serial Port Wiring

The COM1 general purpose serial port maybe software configured as an RS-232, RS-485, RS-422 or SDI-12 hardware interface. Depending on how it is used, the serial port terminal block should be wired as shown below:

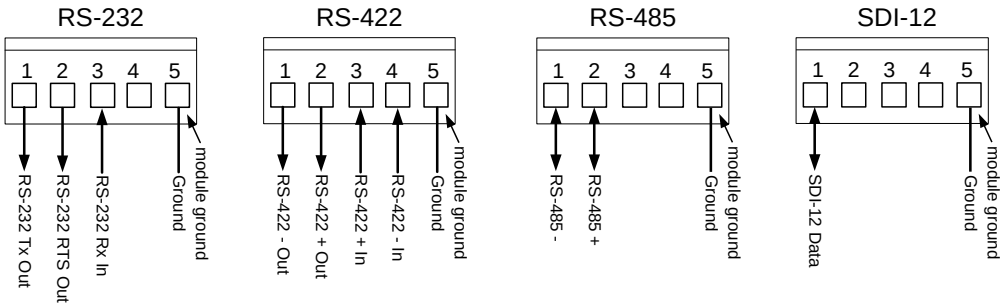

Many RS-232 devices such as radios use "DB9" type connectors. The typical wiring to a DB9 male connector is shown below:

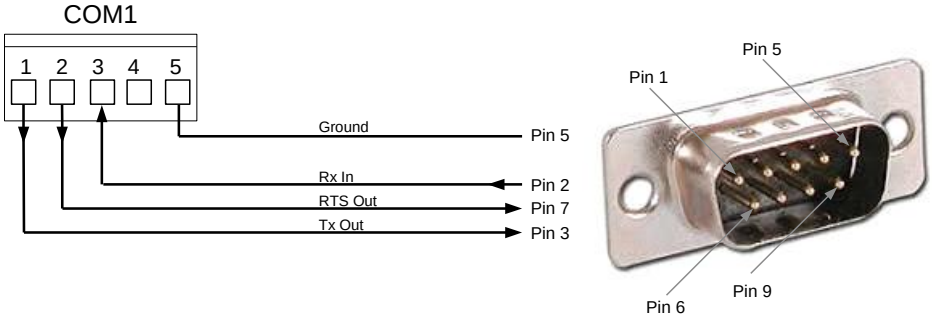

COM2

Communications modules that have no built-in wireless option have a second general purpose serial port (COM2). It's wiring is identical to the first, except that is does not support SDI-12 operation.

Antenna Wiring (modules with cellular modems or radios)

Communications modules with built-in cellular modems and radios have antenna connectors on the side (just above TB1). Cellular modules have an SMA style connector, while all radio modules have an RP-SMA (reverse polarity SMA) style connector as pictured below:

SMA connector (Cellular Communications modules)

RP-SMA connector (Radio Communications modules)

Discrete/Analog Device Wiring - 2110

Modulus 2110 Communications modules have:

- 2 Discrete Inputs
- 1 Discrete Output
- 1 Analog Input (20mA, +5V, +/-5V, 10V, +/-10V, 30V)

The Discrete Inputs accept contact closures or open collector signals that switch to ground, or DC/pulse input signals up to 30Vdc.

The Discrete Output is a solid-state 2A protected FET output. The output sources current to a load from the input supply.

The Analog Input accept signals from 20mA loop devices, or unipolar or bipolar voltage output sources.

Typical wiring configurations are shown in the diagrams below:

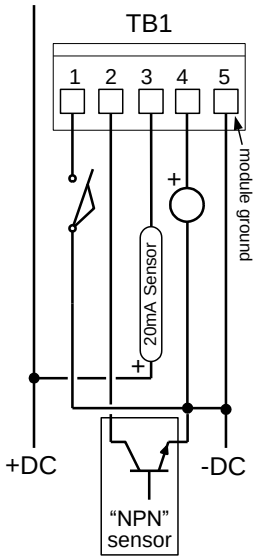

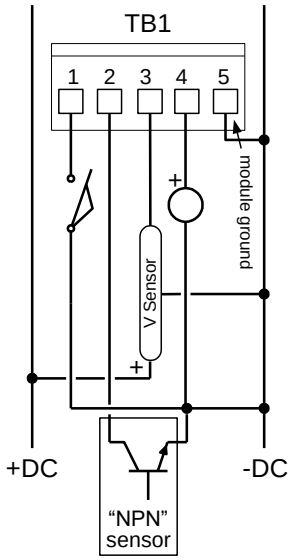

Note that for all types of I/O, terminal 5 is the common connection. This is also the common ground for the module electronics.

Discrete/Analog Device Wiring - 1120MA

Modulus 1120MA Communications modules have:

- 1 Discrete Input
- 1 Discrete Output
- 2 Analog Inputs (20mA)

The Discrete Input accepts contact closures, or DC/pulse input signals up to 30Vdc.

The Discrete Output is a solid-state 2A protected FET output. The output sources current to a load from the input supply.

The Analog Inputs accept signals from 20mA loop devices.

Typical wiring configurations are shown in the diagrams below:

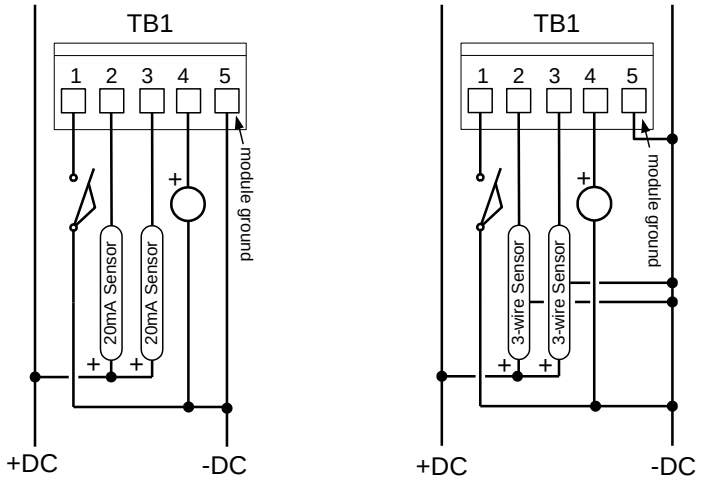

Note that for all types of I/O, terminal 5 is the common connection. This is also the common ground for the module electronics.

Discrete/Analog Device Wiring - 1120V

Modulus 1120V Communications modules have:

- 1 Discrete Input
- 1 Discrete Output
- 2 Analog Inputs (+5V, +/-5V, 10V, +/-10V, 30V)

The Discrete Input accepts contact closures, or DC/pulse input signals up to 30Vdc.

The Discrete Output is a solid-state 2A protected FET output. The output sources current to a load from the input supply.

The Analog Inputs accept signals from voltage sources and voltage type sensor outputs devices.

Typical wiring configurations are shown in the diagrams below:

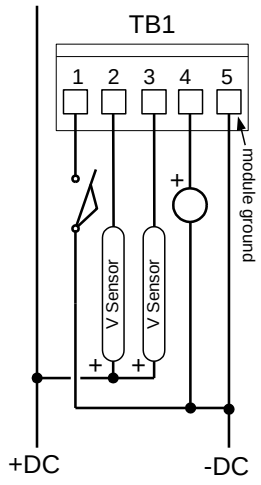

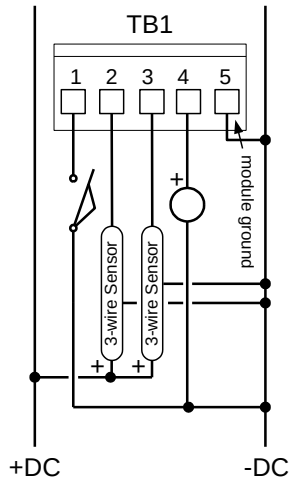

Note that for all types of I/O, terminal 5 is the common connection. This is also the common ground for the module electronics.

Discrete/Analog Device Wiring - 1120R

Modulus 1120R Communications modules have:

- 1 Discrete Input
- 1 Discrete Output
- 2 Analog Inputs (65K ohms, 2252 Ohm Thermistor)

The Discrete Input accepts contact closures, or DC/pulse input signals up to 30Vdc.

The Discrete Output is a solid-state 2A protected FET output. The output sources current to a load from the input supply.

The Analog Inputs accept signals from resistive sensors including thermistor temperature sensors.

A typical wiring configuration is shown in the diagram below:

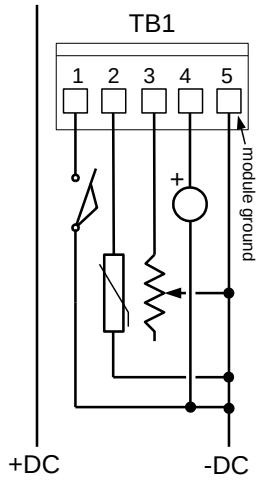

Note that for all types of I/O, terminal 5 is the common connection. This is also the common ground for the module electronics.

Reducing System Power Consumption

In situations where it may be desirable to minimize system power consumption such as solar powered installations, the power consumption of the sensors can be significant. To reduce this impact, the analog sensors can be powered from the discrete output, The communications module may be configured to turn on this output just before an analog reading is taken (sensor "warm-up" time is configurable), and then turn it off for a configurable time period. For example, this works well for solar powered tank sites where the level reading may only need to be taken every 5, 10 or 15 minutes, so that the current consumption of the sensor becomes insignificant since it is powered on for such a very short amount of time.

Typical sensor power saving wiring using the discrete output, for both 2110 (1 analog input) and 1120 (2 analog input) type modules, is shown in the diagrams below:

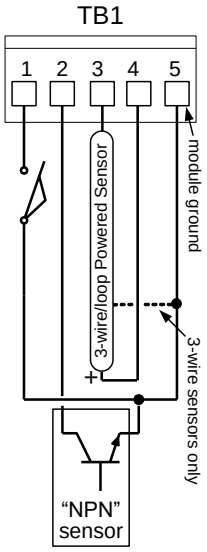

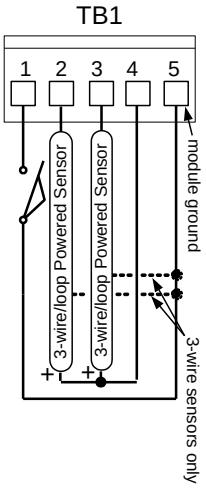

Cellular Installation

Cellular Communications modules require some initial setup work when they are first installed. This involves:

1. Getting an account set up with a cellular carrier.
2. Installing a SIM card with an activated account into the module
3. Verifying and/or setting the APN (Access Point Name) to match the SIM card account

Accounts

Most accounts will require a **PUBLIC IP** unless you are using a virtual private network (VPN) for improved security. You will probably also want a **STATIC IP**, although Modulus does support Dynamic DNS (DDNS) if you don't use one.

Installing the SIM card

A SIM card is required for all 4G/LTE cellular modems. The card is supplied by the cellular carrier and contains information that is associated with the account registered to that SIM card. The SIM card has a logo side and an electrical contacts side. The SIM itself it supplied in a credit card style holder and must be broken out to be inserted into the communications module.

There are several different sizes of SIM cards. The SIM card required by the Modules Cellular modules is the "Mini" or original size. For Verizon, it is part# DIRECTSIM4G-D.

The SIM card should be installed into the module without power. Install the card into the slot with the logo side facing up when the module is oriented so that you can properly read the labeling on the side panel.

Verifying and/or Setting the APN

The module must be configured with an Access Point Name (APN). Sometimes, this name is automatically set by the cellular carrier via the cell tower, but usually it must be manually entered. To verify and/or set the APN, go to the System | Monitor page. Set the Monitor Select to "Cell Modem Data"

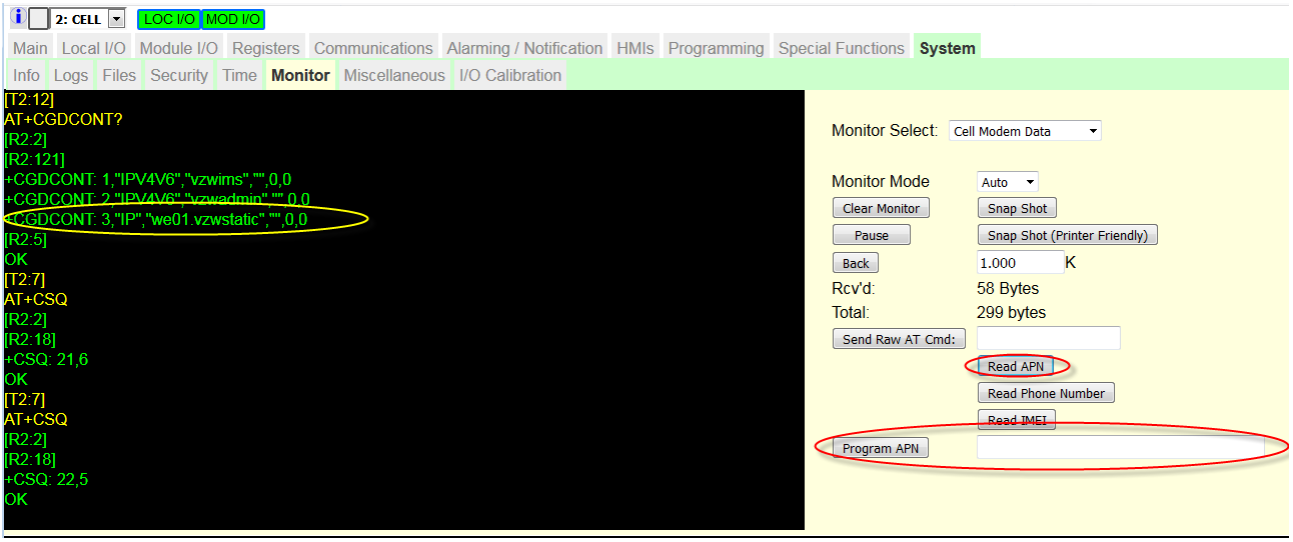

To check or set the APN, an antenna must be installed and at least a minimal connection (RSSI >= -100dB) to the carriers tower. To check the APN, click on the "Read APN" button. The currently configured APN will be displayed in the window on the left (Verizon, as shown, has 3 APNs. Use the 3rd one for data). To set or change the APN, enter the APN in the window next to the Program APN button, then click on the button. You should see the APN command followed by an "OK" displayed in the left hand window.

When the carrier sets up your account, they should provide you with the correct APN. In the United States, Verizon typically uses APNs assigned by region, as follows:

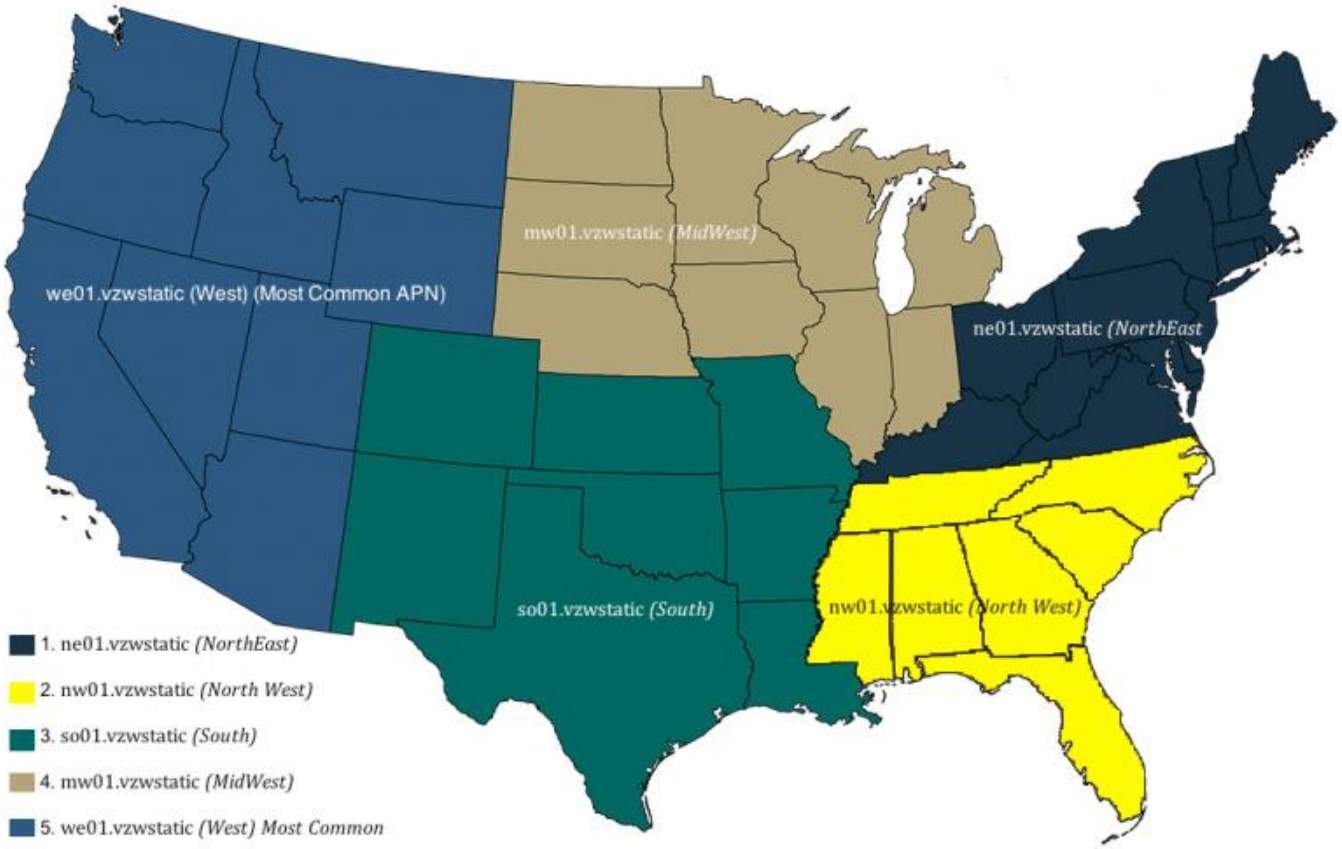

AT&T seems to us primarily one APN for a Machine-to-machione accounts: I2GOLD

In Canada, **Telus** uses: *staticipwest.telus.com* and *staticipeast.telus.com*

Also in Canada, **SaskTel** uses *corp.stm.sk.ca*

Always confirm the APN to be used for the account that the carrier set up for you. You system will not work if the APN does not match the account settings.

60W Power Supply

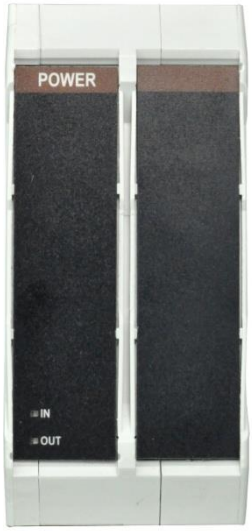

Modulus 60W Power Supply modules convert 120V or 240V incoming AC power to clean regulated DC power for Modulus SCADA Controllers. The modules snap onto the same buss connector system that links Modulus I/O modules together, eliminating manual DC power wiring.

Modulus 60W Power Supply modules are available in two output configurations: 12V@5A and 24V@2.5A. Both are rated for operation from –30°C to 60°C and both include incoming power surge, overload and overvoltage protection.

For ambient operating temperatures between 40°C (104 °F) and 60°C (140 °F), the power supply output rating must be derated linearly to 50%. For example, at 50°C (122 °F, half way between 40°C and 60°C , the power supply can source up to 45W (half way between 60W and 30W).

Modulus 60W Power Supply modules support redundancy with automatic switchover and "hot swapping" for high up-time systems without the need for any additional components.

LED Status Indicators

The Modulus 60W Power Supply has two LED status indicators on its front panel.

IN

This green indicator is lit when AC power is supplied and DC power is available at the power supply out.

OUT

This green indicator is lit when the bus is being powered (by any supply). If there are redundant power supply modules, when AC power is lost to one module, it's IN indicator will not be lit, but the OUT indicator will be lit if another redundant power supply is powering the bus.

Power Supply Wiring

The 60W Power Supply module has a single terminal block (TB1) for AC input power connection, and for monitoring DC output power.

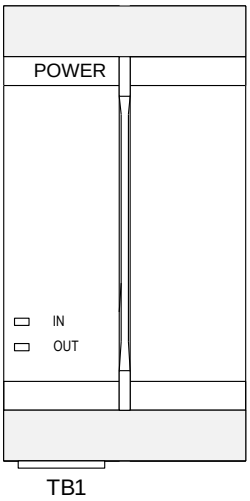

In redundant power supply systems, the DC power output on TB1 can be used to sense when individual power supplies are capable of supplying DC power to the bus (or alarming when they are not). Note that it is not the same as the redundant power on the bus as the output will turn off if the one DC power supply can no longer provide DC power (AC input power lost or power supply has failed). The output may also be used to power external devices as a non-redundant alternative to tapping power from the bus connector.

The typical wiring configuration for TB1 is shown in the diagram below: